Oscar™

CONVERSION KIT

INSTALLATION INSTRUCTIONS

DATA EAST USA, INC.
470 Needles Drive
San Jose CA. 95112

PN780-0082-00

FCC WARNING

This equipment generates and uses radio frequency energy and if not installed and used properly, ie., in strict accordance with this instructions manual, may cause harmful interference to radio communications. This equipment has been tested and found to comply with the limits for a Class A computing device pursuant to Subpart J of Part 15 of the FCC rules, which are designed to provide reasonable protection against such interference when the equipment is operated in a commercial environment.

Operation of this equipment in a residential environment is likely to cause interference in which case the user, at his own expense, will be required to take whatever measures are necessary to correct the interference.

FBI WARNING

Federal law provides severe civil and criminal penalties for the unauthorized reproduction, distribution, or exhibition of copyrighted audiovisual works and video games. The Federal Bureau of Investigation investigates allegations of criminal copyright infringement.

COPYRIGHT NOTICE

Oscar™ is Copyright 1987 Data East Corporation, sold exclusively in the United States of America and Canada by Data East USA, Inc. All rights reserved.

TECHNICAL SUPPORT

To obtain replacement parts or technical assistance, contact the authorized Data East distributor in your area. If you require referral or further technical assistance, you may contact Data East's Customer Service department during the hours of 8:00 am to 5:00 pm Pacific Time at (408) 286-7074.

OSCAR™

INSTALLATION & SERVICE MANUAL

TABLE OF CONTENTS

1. GENERAL INFORMATION

A. Specific Requirements.....1

B. List of Materials.....1

C. Warranty Information.....2

D. Installation Instructions.....3

2. GAME INFORMATION

A. Game Options.....7

3. TECHNICAL INFORMATION

A. PCB Edge Connector Pin-Out.....8

B. PCB Layout Diagram.....9

C. Component List.....10

D. Schematic Diagrams.....11

© 1988 DATA EAST USA, INC.

470 NEEDLES DRIVE
SAN JOSE, CA. 95112
(408) 286-7074

FIRST PRINTING
JANUARY 1988

PN: 780-0082-00

1. GENERAL INFORMATION

A. Specific Requirements.

The Oscar™ video game is a one or two player video game conversion kit. It is intended to be installed into an existing video game cabinet and comes with all the necessary components to make the converted game look and play like a new dedicated game!

The game to be converted must meet the following requirements:

MONITOR: Horizontal, RGB, negative Composite Sync input.

POWER SUPPLY: + 5 vdc @ 5 amperes, and + 12 vdc @ 1 ampere (minimum)

B. List of Materials.

QTY	DESCRIPTION	PART NUMBER
1	PCB, OSCAR	510-0122-00
1	MAIN HARNESS, JAMMA, KIT	036-0158-01
1	JOYSTICK, 4/8 WAY, MONROE	450-0009-00
6	PUSHBUTTON ASSY, YELLOW	350-0016-04
1	CONTROL PANEL OVERLAY, GENERIC	800-0030-00
1	UNDERLAY CARD, OSCAR	810-0027-00
2	SIDE DECAL, GENERIC	820-0040-00
1	MARQUEE PLEX, OSCAR	830-0035-00
2	LABEL SHEET, OSCAR	406-0091-00
1	FCC WARNING LABEL	406-0003-00
1	MANUAL, INSTALLATION & SERVICE	780-0082-00

C. Warranty Information

Data East USA, Inc., ("Seller"), warrants only to the initial purchaser ("Buyer") of its products that the items listed below are free from defects in material and workmanship under normal use and service for the period specified:

GAME LOGIC PRINTED CIRCUIT BOARD(S)	90 DAYS

No other parts of Seller's products are warranted.

Warranty periods are effective from initial date of shipment from Seller to Buyer. Seller's sole liability shall be, at its option, to repair or replace products which are returned to Seller during the warranty periods specified, provided:

1. Seller is notified promptly upon discovery by Buyer that stated products are defective.
2. Such products are properly packaged and then returned freight pre-paid, to Seller's plant.

This warranty does not apply to any parts damaged during shipment and/or due to improper handling, or due to improper installation or usage, or alteration. In no event shall the Seller be liable for any anticipated profits, loss of profits, loss of use, accidental or consequential damages, or any other losses incurred by the customer in connection with the purchase of a Data East USA, Inc., product.

WARRANTY DISCLAIMER

EXCEPT AS SPECIFICALLY PROVIDED IN A WRITTEN CONTRACT BETWEEN SELLER AND BUYER, THERE ARE NO OTHER WARRANTIES, EXPRESSED OR IMPLIED, INCLUDING ANY IMPLIED WARRANTIES OF MERCHANTABILITY OR FITNESS FOR A PARTICULAR PURPOSE.

D. Installation Instructions.

When selecting a game to convert, make sure that the power supply, the monitor, and the coin acceptors are functional. There is nothing more frustrating than installing a conversion kit and having it not operate due to a faulty monitor or power supply. I know...we will all suspect that the new logic pcb is defective, right?

It is mandatory that the cabinet be wired to conform with all National and Local Electric Code requirements before the conversion is attempted, The primary section must have adequate noise filtering on the AC line to prevent unwanted conducted radio frequency interference. 'Adequate' is defined as a filter with both common mode and differential mode filtering and a minimum current capacity of 1 ½ amperes.

According to the FCC and other regulatory agencies, every video game must have be clearly labeled with the Name and Address of the Original Manufacturer, Date of Manufacture (or serial number), Voltage Rating, Current Rating, Suitability for indoor or outdoor use, and Model Number. In addition, the FCC requires that after conversion, the unit must be labeled with a suitable warning stating that radio frequency interference may result from use in a residential area. An acceptable sticker is included in this kit.

IT IS THE RESPONSIBILITY OF THE PERSON PERFORMING THE INSTALLATION TO COMPLY WITH ALL LABELING REQUIREMENTS.

TAKING IT APART

Performing a few simple tasks when preparing a game to be converted can save you much time and effort when you are installing the conversion kit.

Find the wiring diagram of the game to be converted! You will need to identify the required DC power supply output wires and the monitor video and sync wires. Note the color coding of these wires or better yet, label them as to their function. This kit contains a new Main Harness, but you will need to splice it into the existing power supply and video wires.

Remove the existing game harnessing that will not be used in this conversion. NOTE: you are modifying only the secondary (DC from power supply) and I/O (video, speaker, and controls) section of the wiring. DO NOT MODIFY OR REMOVE THE PRIMARY AC WIRING. The primary AC wiring has been designed and built to comply with UL and FCC regulations and must not be altered.

B. Installation Instructions (cont.)

Remove the game pcbs. Remove all exterior decals and repaint the cabinet if necessary. Repair any cabinet damage at this point. Remove the monitor plex (or glass). If your plex has silkscreened artwork on it, you will need to strip it off, or replace the plex with a piece cut to the same size. Using the monitor plex as a template, cut the supplied underlay card to the same size as the plex. **NOTE: Be certain that the opening in the underlay card lines up with the monitor CRT.**

Remove the marquee plex from the game and use it cut the supplied marquee plex down to the correct size. Remove the control panel from the game and remove all controls and graphics from it. NOTE: Save the Player Start buttons, as they are not supplied in this kit.

PUTTING IT TOGETHER

Control Panel: This is never any fun, so lets do it first and get it out of the way. Choose a button and joystick layout that fits your control panel size. Refer to figure 1 for suggested panel layouts to see what holes you will need to add or block.

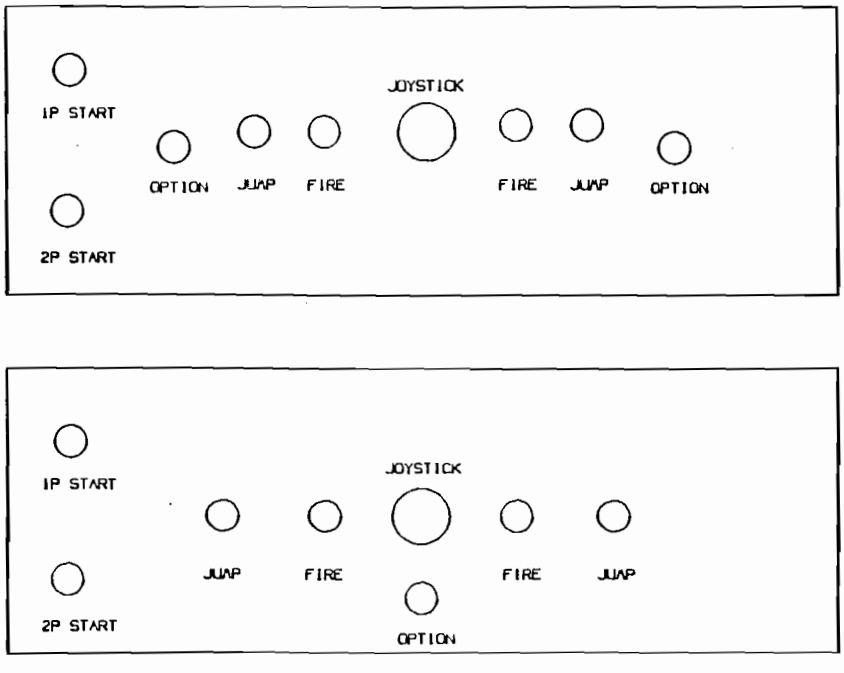

Figure 1

Install the Control Panel Overlay by peeling off the paper backing and carefully laying the overlay down onto the panel. Smooth it out starting in the center and work your way out to the edges, removing all of the trapped air pockets. If possible, cut the edges of the overlay oversize and fold the excess under the panel. Cut out the button and joystick holes. Install the Control Function Labels found on the two sheets of labels supplied in your kit. This game uses the following labels:

1 ea. "1 PLAYER"	2 EA. "FIRE"
1 ea. "2 PLAYERS"	2 EA. "JUMP"
1 OR 2 EA. "OPTION"	1 EA. JOYSTICK PATTERN, 8 WAY

Cover the Control Panel Overlay and Control Function labels with a clear plex to protect the overlay and labels. Install the buttons and joystick at this time. NOTE: This conversion kit does not supply the Player Start buttons. You must use the buttons removed from the control panel in an earlier step. Mount the completed control panel to the cabinet.

Game PCB: Mount the game PCB to a convenient wall of the cabinet using the mounting feet and hardware supplied with the pcb.

Power Supply Wiring: Plug the Main Harness edge connector onto the game PCB's edge connector. Separate the power supply wires and route them through the cabinet to the power supply. Try to keep the length of these wires to a minimum for best results. **NOTE: Use a minimum of 2 wires EACH for the +5 Volts and the Ground lines between the power supply and the PCB.** Terminate them as required.

WARNING: IMPROPER WIRING MAY DAMAGE THE PCB SET AND VOID YOUR WARRANTY!

Player Control Wiring: Route the pushbutton and joystick wires up to their proper destinations, cut to length, and terminate as required. Refer to the Edge Connector Pin-Out for WIRE COLOR and FUNCTION info.

Monitor Wiring: The game PCB has outputs for Positive Red, Green, Blue, and Negative Composite Sync. If your monitor has separate Horizontal and Vertical sync inputs, hook the Composite sync to the negative Horizontal input. This method will work on most monitors, however some model Electrohome's require that the Composite sync signal be hooked up to both the negative Horizontal and Vertical inputs. Contact your distributor for more information if you are uncertain as to how to hook up the monitor wires.

B. Installation Instructions (cont.)

Coin Counter: The Coin Counter(s) may be the 12 volt or 6 volt type as the PCB utilizes an open collector drive circuit. Hook one coin counter wire to the required voltage (+12v or +5v) and the other wire to the coin counter signal wire from the game PCB.

Graphics: Install the Game Instruction labels onto the Underlay Card, either in the lower portion, or on one side of the picture tube cutout. Install the Underlay Card under a clear monitor plex (or glass). Mount the new Marquee Plex, and install the Side Decals. **NOTE: Install the FCC Warning label to the upper rear of the cabinet.**

THE BIG TEST!

REMOVE THE MAIN HARNESS EDGE CONNECTOR FROM THE GAME PCB!

Apply power to the game. **Measure the +5 volts** at the edge connector and **adjust to +5.15 VDC.** Measure the +12 and -5 vdc wire to be certain they are connected properly and are on the correct terminals. Remove power to the game.

RE-CONNECT THE MAIN HARNESS EDGE CONNECTOR!

Apply power to the game once again. The attract mode video should appear on the screen. Adjust the picture size and colors on the monitor to get the optimum appearance. Adjust the Sync and Hold controls on the monitor for a stable picture. Coin it up and give it a try! Test all the controls and sound for proper operation.

Congratulations! You have completed the installation of your new Data East conversion kit! We hope that it gives you many years of successful operation.

2. GAME INFORMATION

A. Game Options.

The game options can be changed via 2 banks of dip-switches on the game PCB. Be certain to remove power to the game when changing settings.

DIP SWITCH 1:

ITEM	ACTION	1	2	3	4	5	6	7	8
COIN	1 COIN = 1 CREDIT:	OFF	OFF						
VS	1 COIN = 2 CREDIT:	ON	OFF						
CREDIT	1 COIN = 3 CREDIT:	OFF	ON						
COIN 1	2 COIN = 1 CREDIT:	ON	ON						
COIN	1 COIN = 1 CREDIT:			OFF	OFF				
VS	1 COIN = 2 CREDIT:			ON	OFF				
CREDIT	1 COIN = 3 CREDIT:			OFF	ON				
COIN 2	2 COIN = 1 CREDIT:			ON	ON				
DEMO FREEZE MODE	NO:					OFF			
1P=STOP, 2P=CONTINUE	YES:					ON			
ATTRACT MODE SOUND	YES:						OFF		
	NO:						ON		
FLIP SCREEN	NORMAL:							OFF	
	REVERSE:							ON	
CABINET TYPE	TABLE:								OFF
	UPRIGHT:								ON

DIP SWITCH 2:

ITEM	ACTION	1	2	3	4	5	6	7	8
NUMBER	THREE:	OFF	OFF						
OF	FIVE:	ON	OFF						
LIVES	ONE:	OFF	ON						
	INFINITE:	ON	ON						
LEVEL	NORMAL:			OFF	OFF				
OF	EASY:			ON	OFF				
DIFFICULTY	HARD:			OFF	ON				
	HARDEST:			ON	ON				
BONUS LIVE	40,000PTS:					OFF	OFF		
AWARDED	60,000PTS:					ON	ON		
EVERY:	90,000PTS:					OFF	ON		
	50,000PTS ONLY:					ON	ON		
NOT USED	LEAVE OFF :							OFF	
CONTINUE	YES:								OFF
MODE	NO:								ON

3. TECHNICAL INFORMATION

A. PCB Edge Connector Pin-Out.

The DE-0301 uses a 56 pin 'JAMMA' standard Edge Connector. The PCB edge connector pin-out is shown in figure 2 below.

WIRE COLOR	SOLDER SIDE	PIN #	PIN #	PARTS SIDE	WIRE COLOR
BK	GROUND	A1	B1	GROUND	BK
BK	GROUND	A2	B2	GROUND	BK
RD	+5 VOLTS	A3	B3*	+5 VOLTS	RD
RD	+5 VOLTS	A4	B4	+5 VOLTS	RD
BL	-5 VOLTS	A5	B5	-5 VOLTS	BL
OR	+12 VOLTS	A6	B6	+12 VOLTS	OR
	BLOCKING KEY	A7	B7	BLOCKING KEY	
VI	COIN COUNTER 2	A8	B8	COIN COUNTER 1	SL
		A9	B9		
WH/BK	SPEAKER (-)	A10	B10	SPEAKER (+)	BK/WH
		A11	B11		
GN	VIDEO-GREEN	A12	B12	VIDEO-RED	RD
WH	VIDEO-SYNC	A13	B13	VIDEO-BLUE	BL
YL	SERVICE SW.	A14	B14	VIDEO GROUND	BK
BK/YL	TILT SW. (N/A)	A15	B15	TEST SW.	BK/GN
RD	COIN SWITCH 2	A16	B16	COIN SWITCH 1	GN
RD/WH	2P START	A17	B17	1P START	BN/WH
YL/WH *	2P UP	A18	B18	1P UP	YL
GN/WH *	2P DOWN	A19	B19	1P DOWN	GN
OR/WH *	2P LEFT	A20	B20	1P LEFT	OR
RD/WH *	2P RIGHT	A21	B21	1P RIGHT	RD
BL/WH *	2P FIRE SW.	A22	B22	1P FIRE SW.	BL
VI/WH *	2P JUMP SW.	A23	B23	1P JUMP SW.	VI
PK/WH *	2P OPTION SW.	A24	B24	1P OPTION SW.	PK
		A25	B25		
		A26	B26		
BK	GROUND	A27	B27	GROUND	BK
BK	GROUND	A28	B28	GROUND	BK

* USED ONLY ON 2 PLAYER GAMES

Figure 2

B. PCB Component Layout.

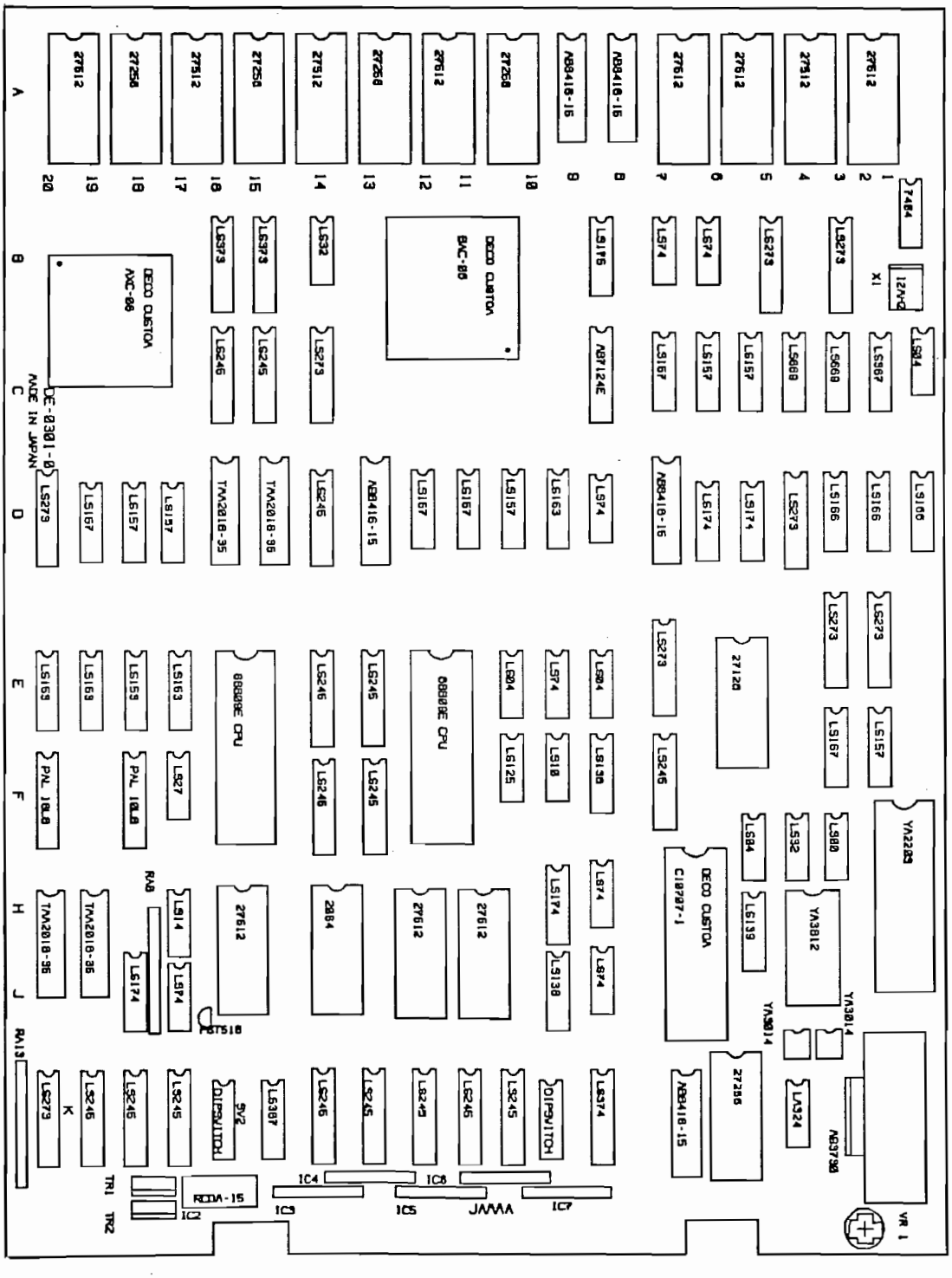
27612
27512
27256
74S04
12MHz
X1
LS273
LS374
LS32
LS245
LS246
LS373
LS279
LS157
LS174
LS163
LS167
LS166
LS139
LS138
LS125
LS08
LS04
LS10
LS27
LS14
LS74
LS153
LS367
LS368
LS175
LS324
LS387
LS245
LS246
LS273
LS374
LS279
ABT124E
ABT245
ABT374
ABT541
ABT646
ABT652
ABT823
ABT827
ABT828
ABT841
ABT843
ABT845
ABT861
ABT863
ABT866
ABT867
ABT869
ABT877
ABT899
ABT2952
ABT2953
ABT16244
ABT16245
ABT16374
ABT16500
ABT16501
ABT16502
ABT16543
ABT16646
ABT16652
ABT16823
ABT16827
ABT16828
ABT16841
ABT16843
ABT16845
ABT16861
ABT16863
ABT16866
ABT16867
ABT16869
ABT16877
ABT16899
ABT16952
ABT16953
ABT18245
ABT18374
ABT18500
ABT18501
ABT18502
ABT18543
ABT18646
ABT18652
ABT18823
ABT18827
ABT18828
ABT18841
ABT18843
ABT18845
ABT18861
ABT18863
ABT18866
ABT18867
ABT18869
ABT18877
ABT18899
ABT18952
ABT18953
ABT32244
ABT32245
ABT32374
ABT32500
ABT32501
ABT32502
ABT32543
ABT32646
ABT32652
ABT32823
ABT32827
ABT32828
ABT32841
ABT32843
ABT32845
ABT32861
ABT32863
ABT32866
ABT32867
ABT32869
ABT32877
ABT32899
ABT32952
ABT32953
ABT162244
ABT162245
ABT162374
ABT162500
ABT162501
ABT162502
ABT162543
ABT162646
ABT162652
ABT162823
ABT162827
ABT162828
ABT162841
ABT162843
ABT162845
ABT162861
ABT162863
ABT162866
ABT162867
ABT162869
ABT162877
ABT162899
ABT162952
ABT162953
ABT182244
ABT182245
ABT182374
ABT182500
ABT182501
ABT182502
ABT182543
ABT182646
ABT182652
ABT182823
ABT182827
ABT182828
ABT182841
ABT182843
ABT182845
ABT182861
ABT182863
ABT182866
ABT182867
ABT182869
ABT182877
ABT182899
ABT182952
ABT182953
ABT322244
ABT322245
ABT322374
ABT322500
ABT322501
ABT322502
ABT322543
ABT322646
ABT322652
ABT322823
ABT322827
ABT322828
ABT322841
ABT322843
ABT322845
ABT322861
ABT322863
ABT322866
ABT322867
ABT322869
ABT322877
ABT322899
ABT322952
ABT322953
ABT1622244
ABT1622245
ABT1622374
ABT1622500
ABT1622501
ABT1622502
ABT1622543
ABT1622646
ABT1622652
ABT1622823
ABT1622827
ABT1622828
ABT1622841
ABT1622843
ABT1622845
ABT1622861
ABT1622863
ABT1622866
ABT1622867
ABT1622869
ABT1622877
ABT1622899
ABT1622952
ABT1622953
ABT3224244
ABT3224245
ABT3224374
ABT3224500
ABT3224501
ABT3224502
ABT3224543
ABT3224646
ABT3224652
ABT3224823
ABT3224827
ABT3224828
ABT3224841
ABT3224843
ABT3224845
ABT3224861
ABT3224863
ABT3224866
ABT3224867
ABT3224869
ABT3224877
ABT3224899
ABT3224952
ABT3224953
ABT16244
ABT16245
ABT16374
ABT16500
ABT16501
ABT16502
ABT16543
ABT16646
ABT16652
ABT16823
ABT16827
ABT16828
ABT16841
ABT16843
ABT16845
ABT16861
ABT16863
ABT16866
ABT16867
ABT16869
ABT16877
ABT16899
ABT16952
ABT16953
ABT18244

C. Component List.

The following section lists the available components on the DE-0301 PCB along with the Data East part number and the location(s) where they are used.

TYPE	DEVICE ID	PART NUMBER	PCB LOCATION
TTL	74LS00	100-0025-00	3FH
TTL	7404	100-0007-00	1B
TTL	74LS04	100-0027-00	1C, 10E, 8E, 5FH
TTL	74LS10	100-0029-00	9F
TTL	74LS14	100-0030-00	17H
TTL	74LS27	100-0000-00	17F
TTL	74LS32	100-0034-00	14B, 4FH
TTL	74LS74	100-0037-00	6B, 7B, 8D, 9E, 8H, 8J, 17J
TTL	74LS125	100-0166-00	10F
TTL	74LS138	100-0042-00	9J, 8F
TTL	74LS139	100-0043-00	5HJ
TTL	74LS153	100-0045-00	17E, 18E, 19E, 20E
TTL	74LS157	100-0046-00	11 USED - SEE PCB LAYOUT
TTL	74LS163	100-0049-00	9D
TTL	74LS166	100-0020-00	1D, 2D, 3D
TTL	74LS174	100-0051-00	5D, 6D, 18J, 9H
TTL	74LS175	100-0149-00	8B
TTL	74LS245	100-0058-00	16 USED - SEE PCB LAYOUT
TTL	74LS273	100-0022-00	3B,5B,14B,20D,4D,2E,3E,7E,20K
TTL	74LS367	100-0062-00	2C, 15K
TTL	74LS373	100-0111-00	15B, 16B
TTL	74LS374	100-0064-00	8K
TTL	74LS669	100-0191-00	3C, 4C
CUSTOM	BAC-06	100-0234-00	12B
CUSTOM	C10707-1	100-0066-00	6HJ
CPU	68B09E	100-0189-01	12EF, 16EF
RAM	TMM2018-35	105-0035-00	15D, 16D, 19HJ, 20HJ
RAM	MB8464A-10	105-0081-00	14HJ
RAM	MB8416A-15	105-0082-00	8A, 9A, 7D, 13D, 6K
LINEAR	YM2203	100-0123-00	1HJ
LINEAR	YM3812	100-0238-00	4HJ
LINEAR	YM3014	100-0179-00	3JK, 4JK
LINEAR	LM324	100-0124-00	4K
LINEAR	MB3730	100-0081-00	3K
LINEAR	PST518	110-0065-00	PST518
HYBRID IC	RCDM-11	100-0185-00	IC3, IC4, IC5, IC6, IC7
HYBRID IC	RCDM-15	100-0158-00	IC2
RESNET	RM-C3	120-0066-00	RA9, RA13
XISTOR	2SD880	110-0044-00	TR1, TR2
CRYSTAL	12 MHZ	140-0003-00	X1

D. Schematic Diagrams.

DE-0301-0 PCB

Pages 1/16

thru

16/16

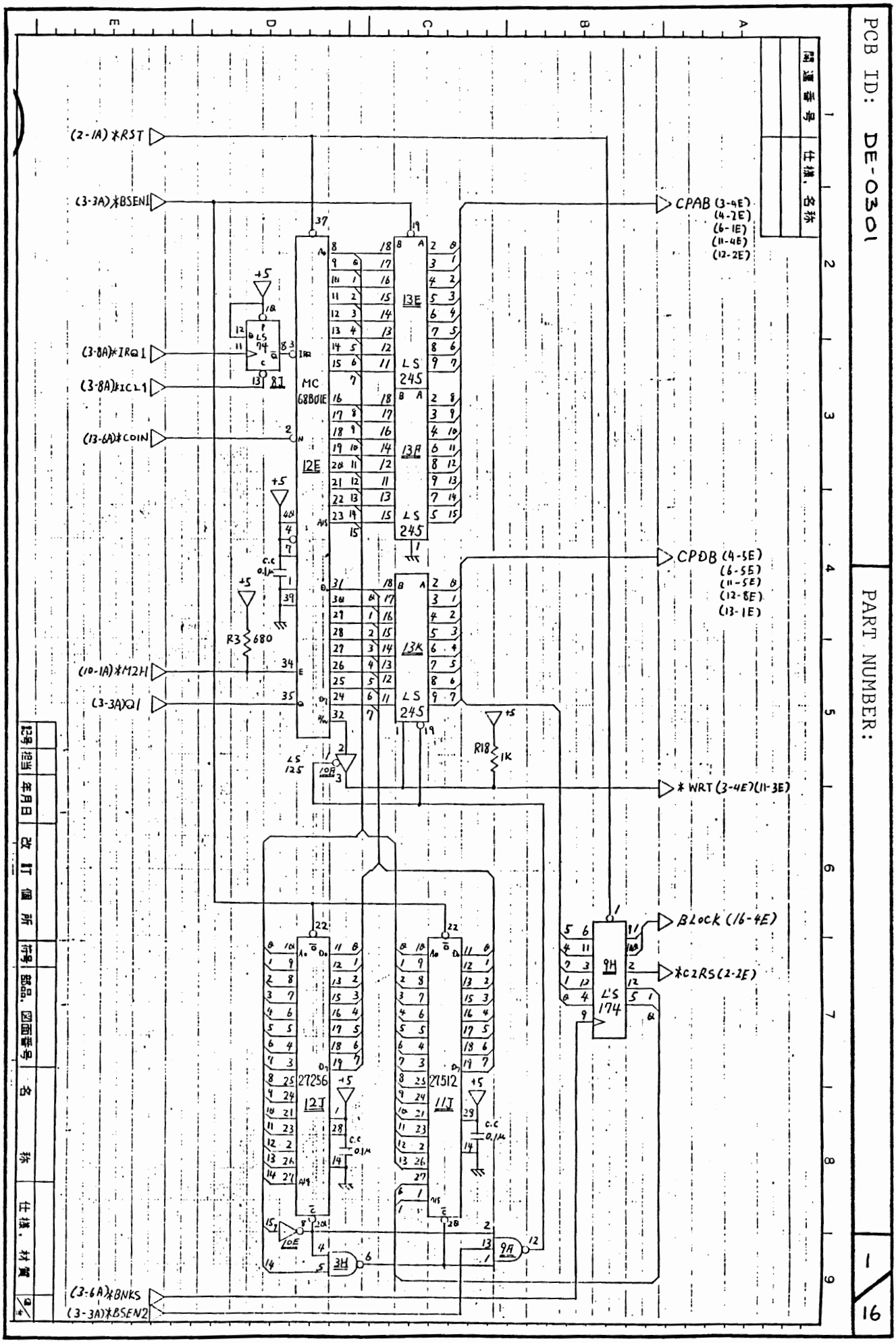
(2-1A) *RST
(3-3A) *BSEN1
(3-8A) *IRQ1
(3-8A) *ICL1
(13-6A) *COIN
(10-1A) *M2H
(3-3A) Q1
(3-6A) *BNKS
(3-3A) *BSEN2
CPAB (3-4E) (4-2E) (6-1E) (11-4E) (12-2E)
CPDB (4-5E) (6-5E) (11-5E) (12-8E) (13-1E)
* WRT (3-4E) (11-3E)
BLock (16-4E)
*C2RS (2-2E)
MC 68B01E
12E
13E
13F
13K
LS 245
LS 74
LS 125
LS 174
9H
27256
12T
27512
11T
R3 680
R18 1K
C.C 0.1μ
10E
3H
9A

PCB ID: DE-0301

PART NUMBER:

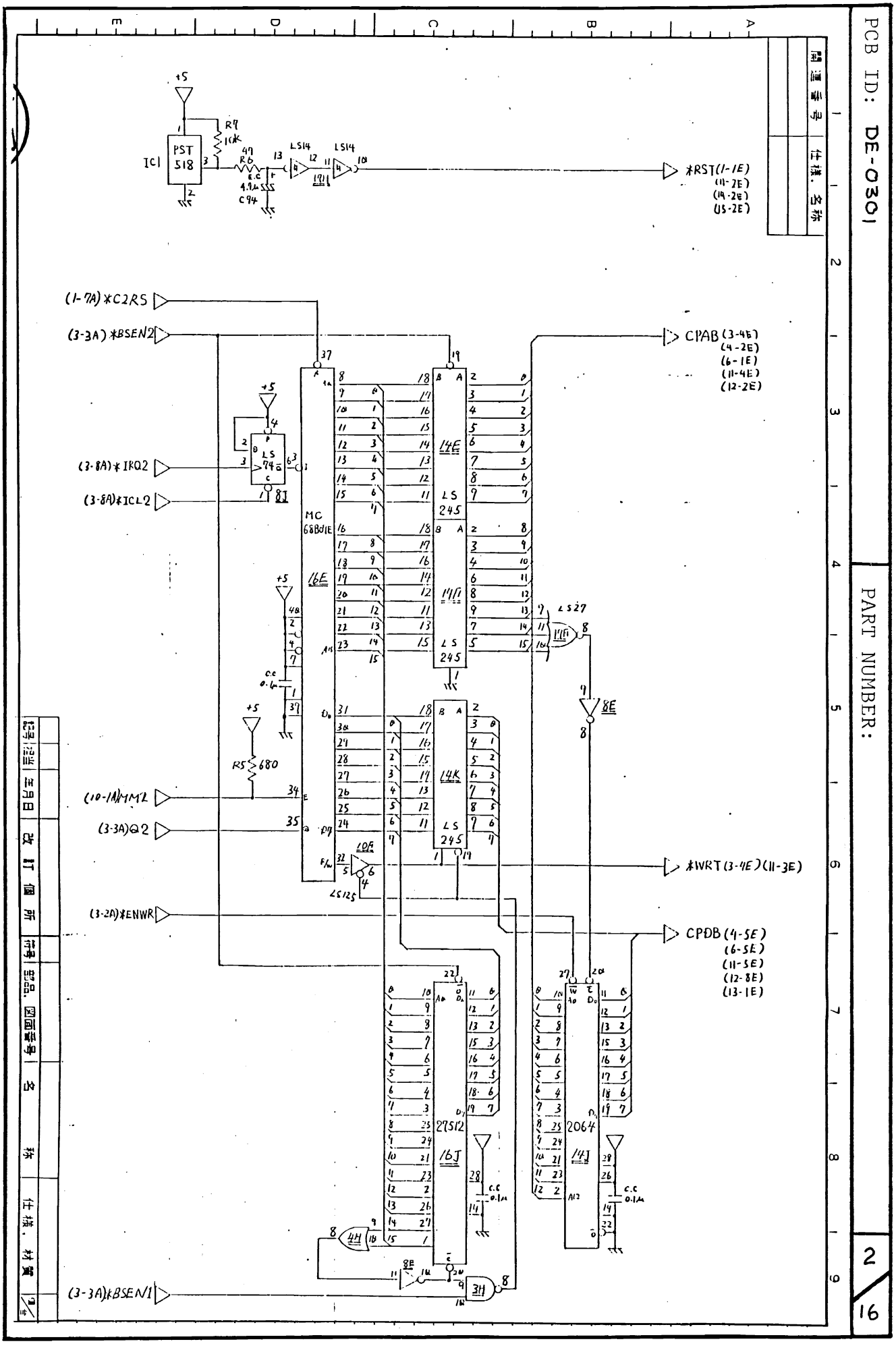

改訂	年月日	改訂内容	名称	仕様・材質

2/16

PCB ID: DE-0301

PART NUMBER:

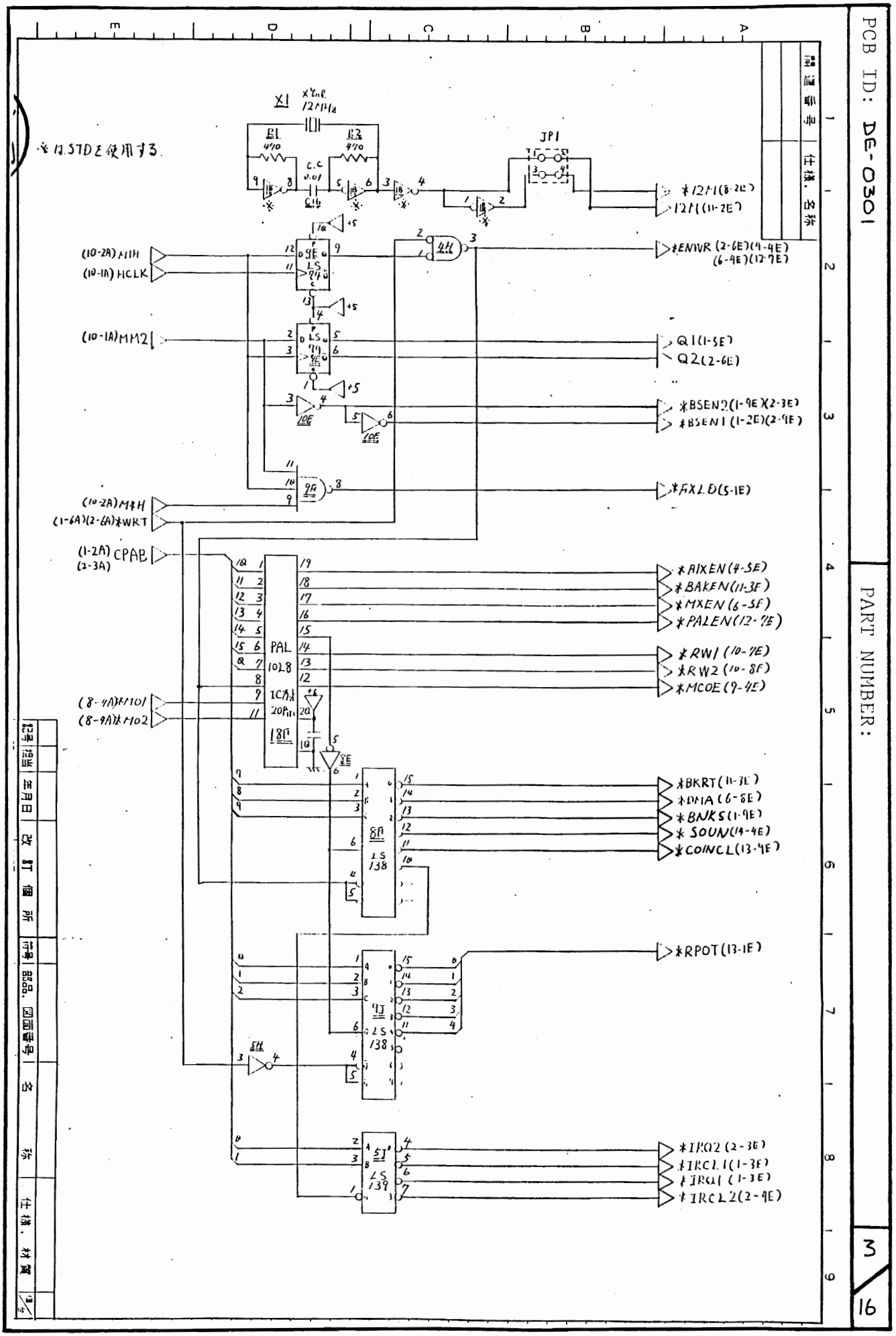

記号	指示	年月日	改訂個所	作者	部品、図面番号	名称	仕様、材質	数量

図面番号	仕様、名称

3/16

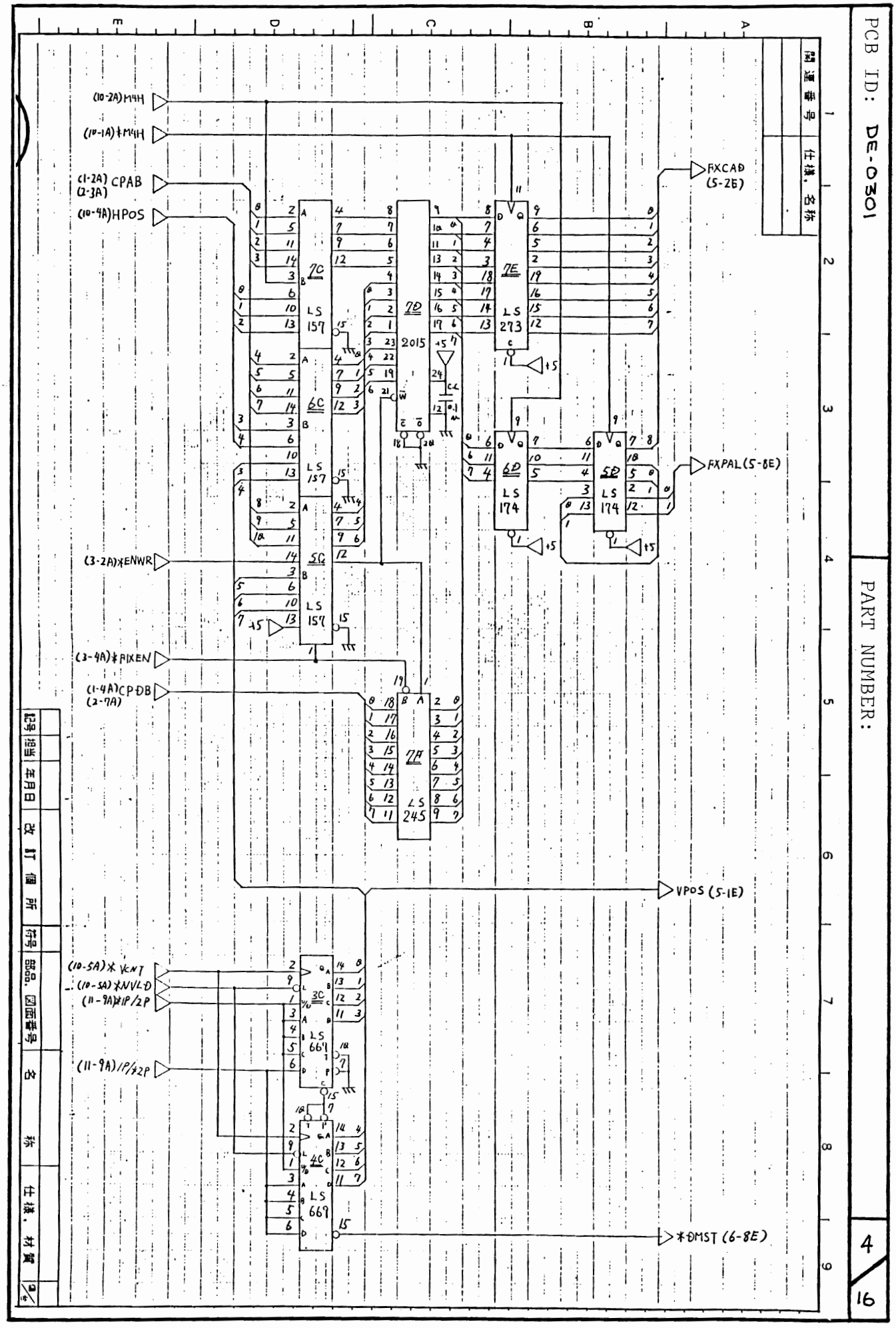
(10-2A)HSH
(10-1A)*HSH
(1-2A) CPAB
(2-3A)
(10-4A)HPOS
(3-2A)*ENWR
(3-4A)*PIXEN
(1-4A)CPDB
(2-7A)
(10-5A)*VCNT
(10-5A)*NVLD
(11-9A)*IP/2P
(11-9A)IP/*2P
FXCAD (5-2E)
FXPAL (5-8E)
VPOS (5-1E)
*DMST (6-8E)
7C LS 157
7D 2015
7E LS 273
6C LS 157
6D LS 174
5D LS 174
5C LS 157
7A LS 245
3C LS 661
4C LS 669
+5

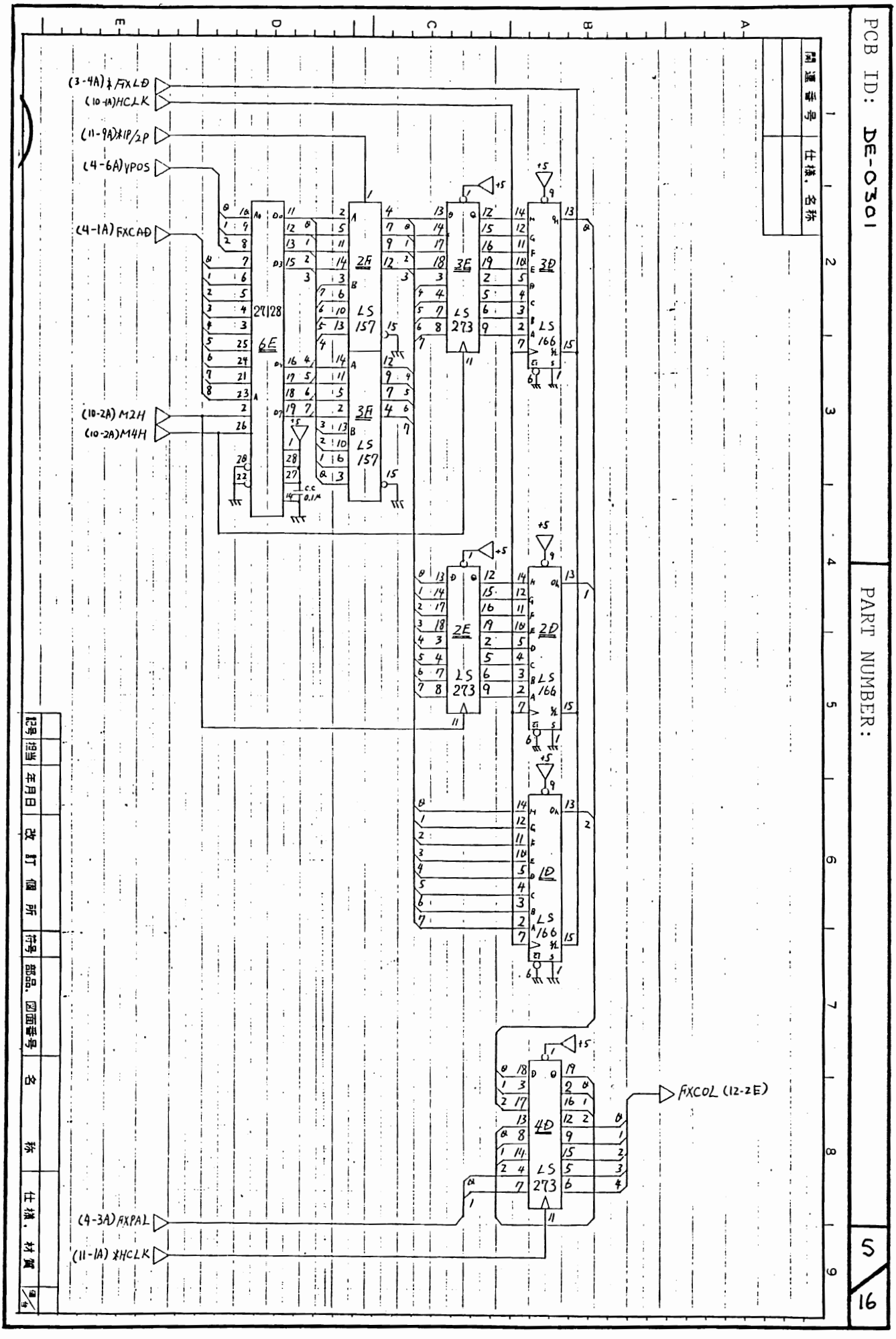
PCB ID: DE-0301
PART NUMBER:
5
16
(3-4A) *FXLD
(10-1A) HCLK
(11-9A) *1P/2P
(4-6A) YPOS
(4-1A) FXCAD
(10-2A) M2H
(10-2A) M4H
(4-3A) FXPAL
(11-1A) *HCLK
FXCOL (12-2E)
27128
6E
2H
LS 157
3H
LS 157
3F
LS 273
3D
LS 166
2E
LS 273
2D
LS 166
1D
LS 166
4D
LS 273
C.C 0.1μ
+5

PCB ID: DE-0301 | PART NUMBER: | 9 / 16

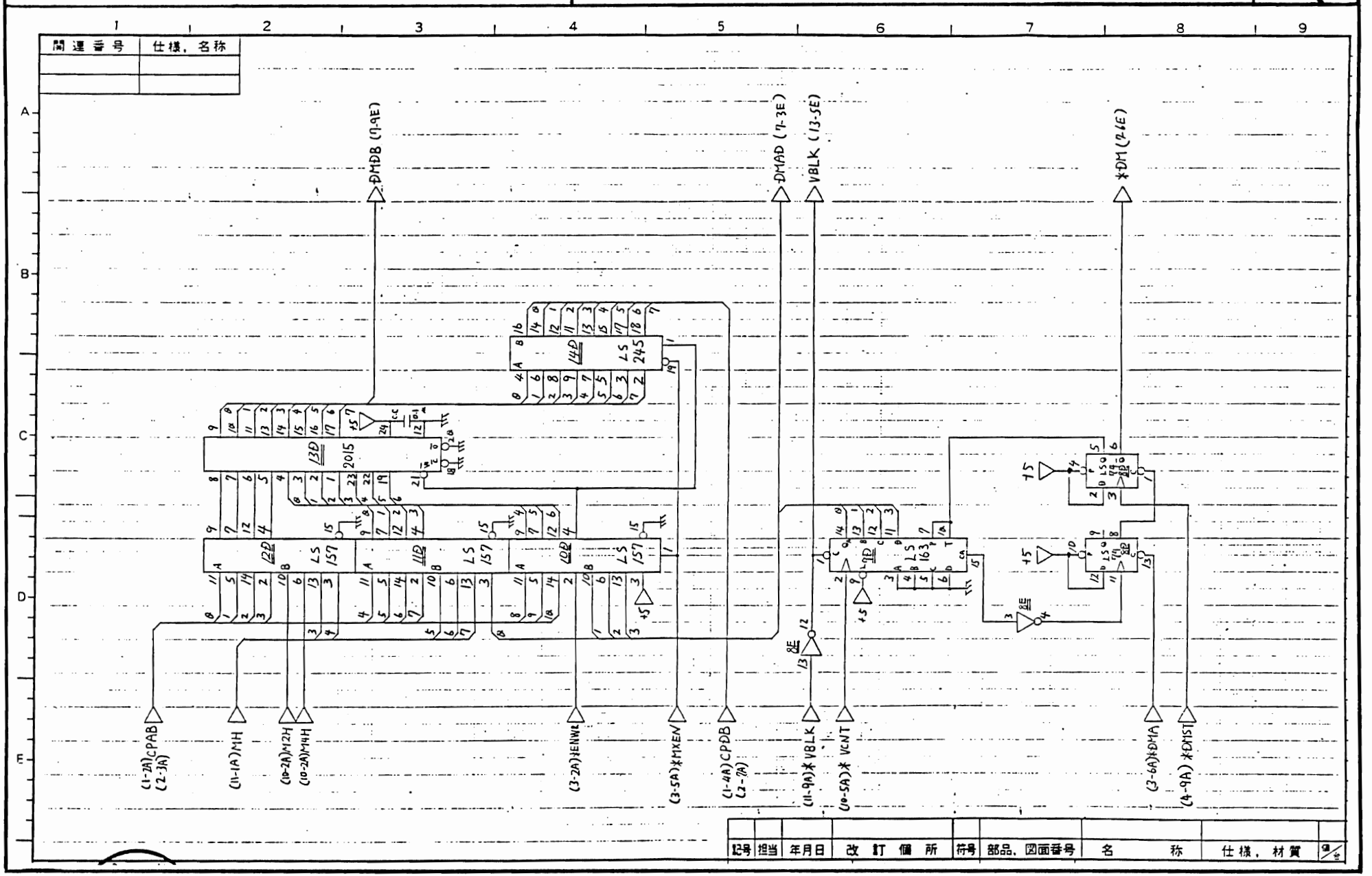

PCB ID: DE-0301

PART NUMBER:

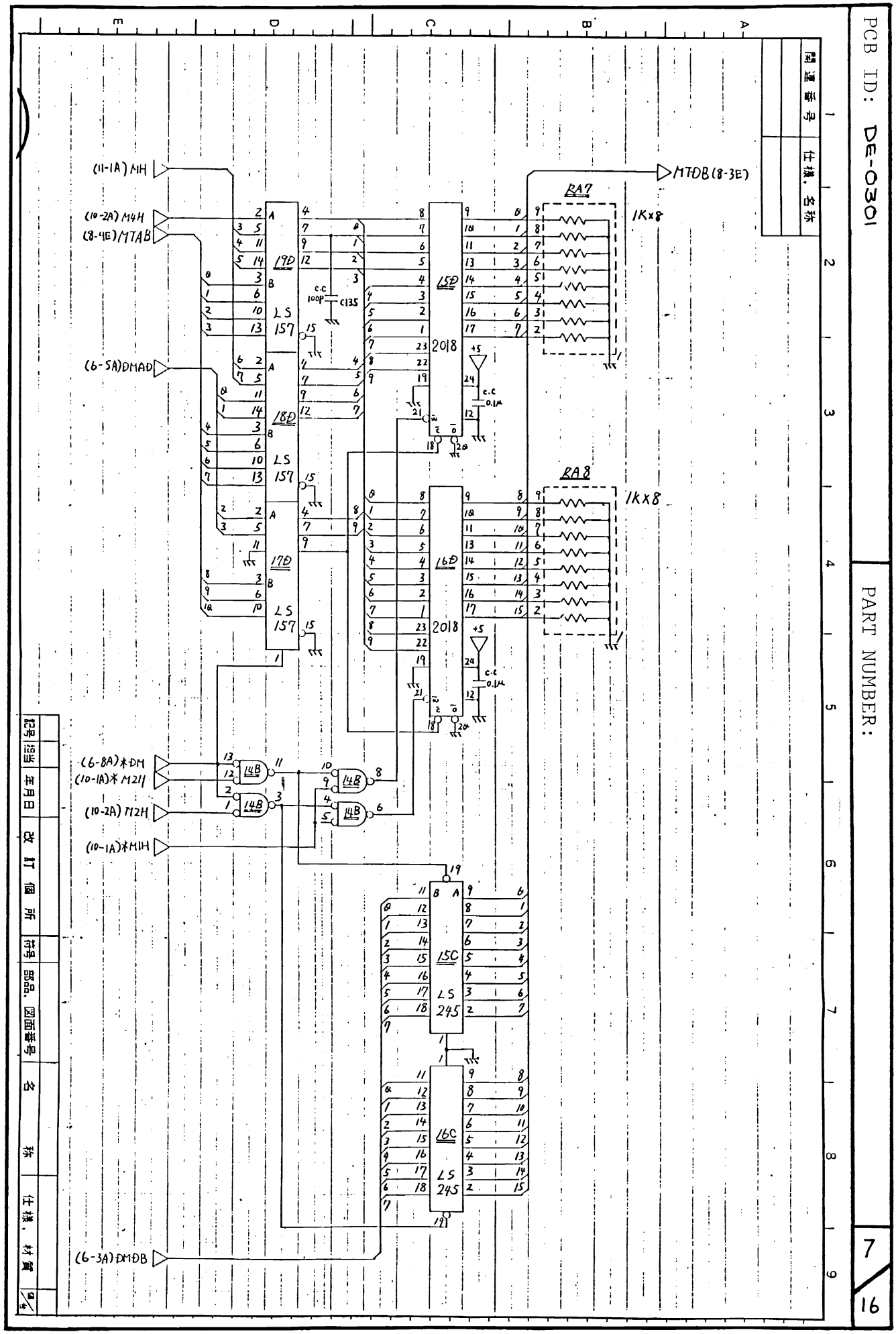

記号	摘要	年月日	改訂個所	符号	部品、図面番号	名称	仕様、材質	個数

関連番号	仕様、名称

7/16

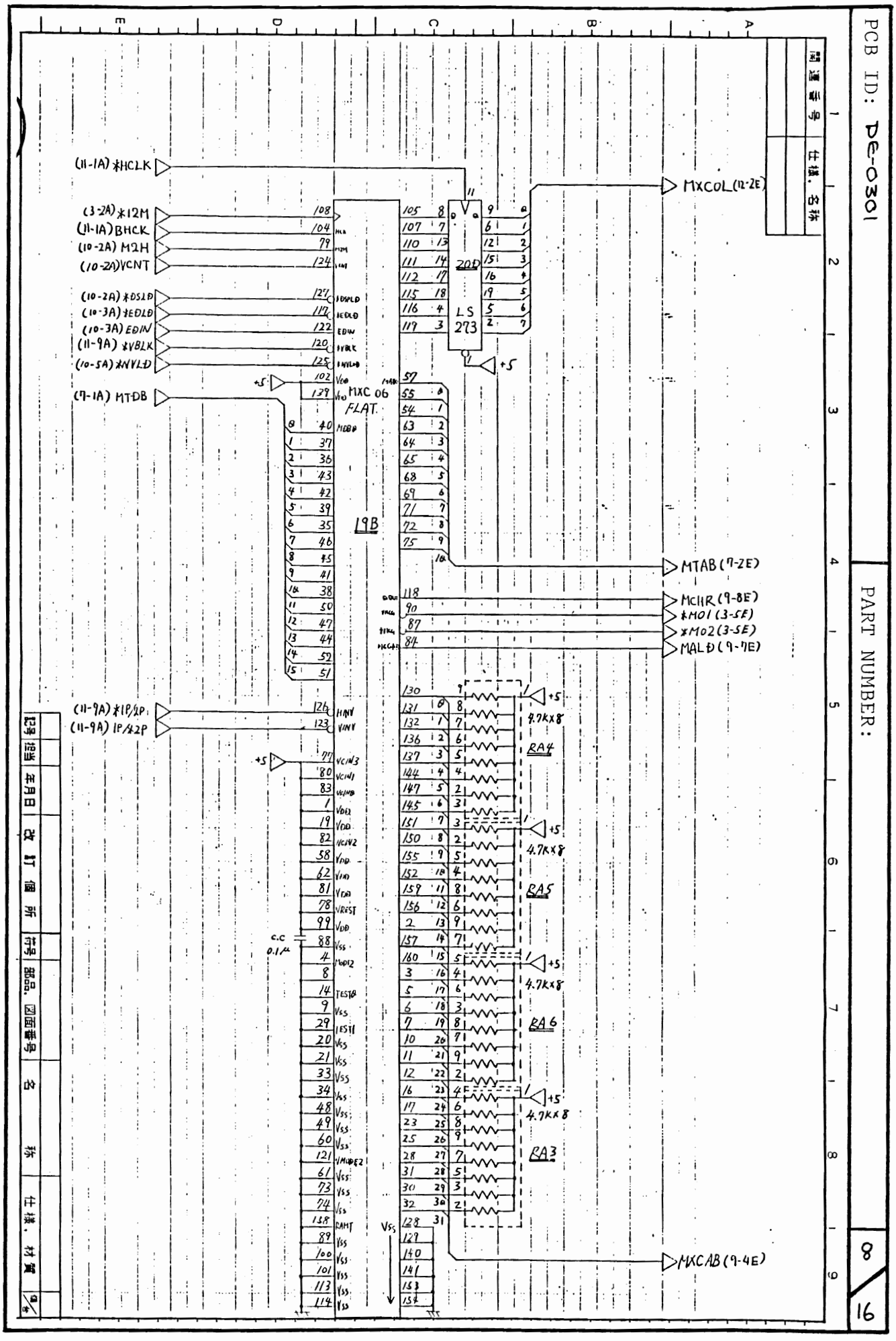
PCB ID: PE-0301
PART NUMBER:
8
16
(11-1A) *HCLK
(3-2A) *12M
(11-1A) BHCK
(10-2A) M2H
(10-2A) VCNT
(10-2A) *DSLD
(10-3A) *EDLD
(10-3A) EDIN
(11-9A) *VBLK
(10-5A) *NVLD
(9-1A) MTDB
(11-9A) *1P/2P
(11-9A) 1P/2P
MXC 06
FLAT
19B
20D
LS 273
+5
0.1μ
4.7K×8
RA4
RA5
RA6
RA3
MXCOL (12-2E)
MTAB (7-2E)
MCHR (9-8E)
*M01 (3-5E)
*M02 (3-5E)
MALD (9-7E)
MXCAB (9-4E)
Vss
設計
製図
年月日
改訂個所
符号
部品、図面番号
名称
仕様、材質
9/9

PCB ID: DE-0301

PART NUMBER:

9/16

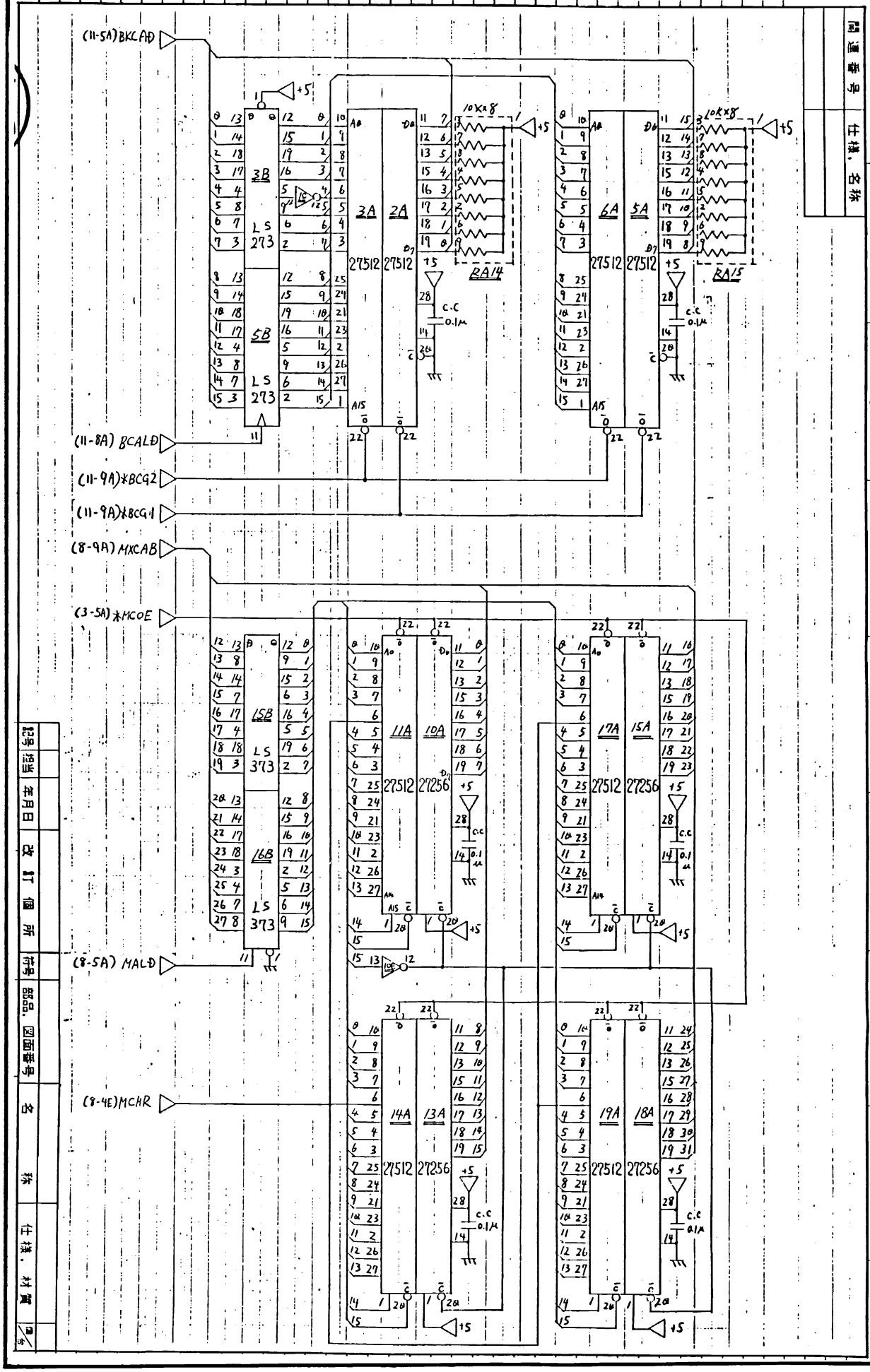

PCB ID: DE-0301

PART NUMBER:

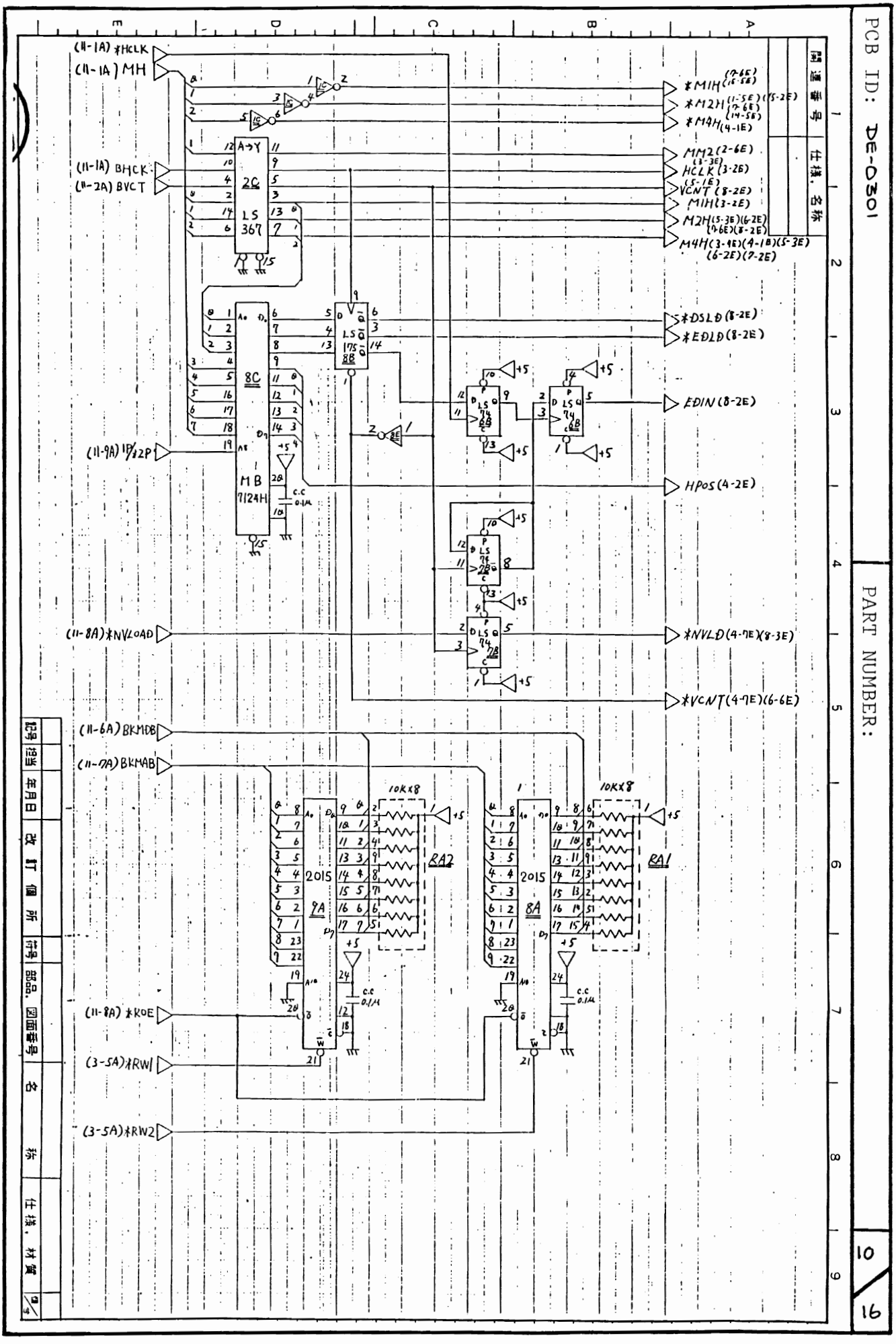

記号	担当	年月日	改訂個所	符号	部品・図面番号	名称	仕様・材質	数量

関連番号	仕様・名称

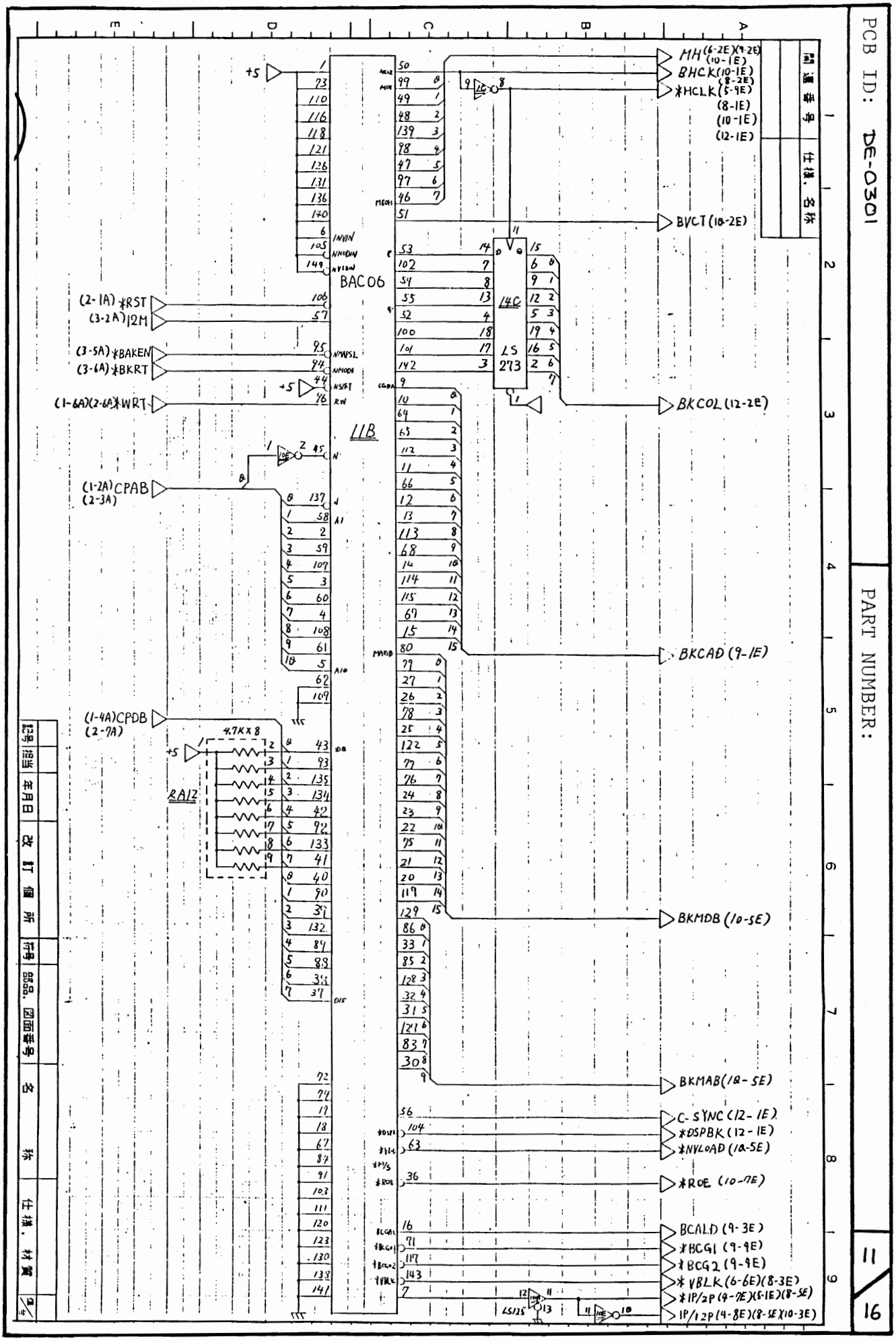
PCB ID: DE-0301
PART NUMBER:
11
16
BAC06
14C
LS 273
RA12
4.7K×8
MH (6-2E)(9-2E)(10-1E)
BHCK (10-1E)(8-2E)
*HCLK (5-9E)(8-1E)(10-1E)(12-1E)
BVCT (10-2E)
BKCOL (12-2E)
BKCAD (9-1E)
BKMDB (10-5E)
BKMAB (12-5E)
C-SYNC (12-1E)
*DSPBK (12-1E)
*NVLOAD (10-5E)
*ROE (10-7E)
BCALD (9-3E)
*BCG1 (9-9E)
*BCG2 (9-9E)
*VBLK (6-6E)(8-3E)
*1P/2P (9-7E)(5-1E)(8-5E)
1P/2P (9-8E)(8-5E)(10-3E)
(2-1A) *RST
(3-2A) 12M
(3-5A) *BAKEN
(3-6A) *BKRT
(1-6A)(2-6A) *WRT
(1-2A)(2-3A) CPAB
(1-4A)(2-7A) CPDB
+5
LS125
图面番号
仕様・名称
年月日
改訂個所
符号
名称
仕様・材質

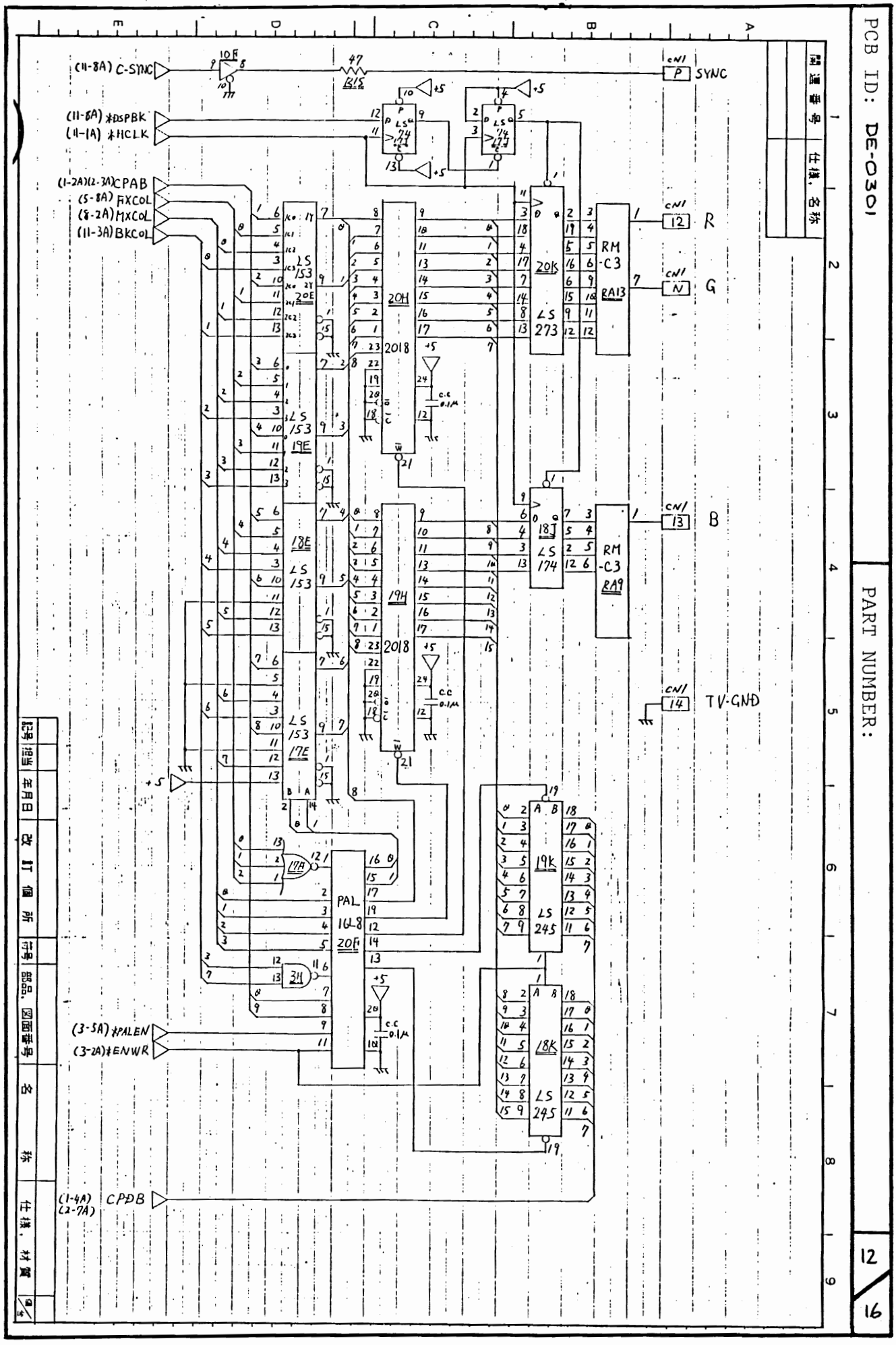
PCB ID: DE-0301
PART NUMBER:
12
16
(11-8A) C-SYNC
47 Ω1/8
CN1 P SYNC
(11-8A) *DSPBK
(11-1A) *HCLK
(1-2A)(2-3A) CPAB
(5-8A) FXCOL
(8-2A) MXCOL
(11-3A) BKCOL
LS 153 20E
20H 2018
LS 153 19E
19H 2018
LS 153 18E
LS 153 17E
20K LS 273
18J LS 174
19K LS 245
18K LS 245
RM-C3 RA13
RM-C3 RA9
CN1 12 R
CN1 N G
CN1 13 B
CN1 14 TV-GND
C.C 0.1μ
17A
34
PAL 16L8 20P
(3-5A) *PALEN
(3-2A) *ENWR
(1-4A) (2-7A) CPDB
+5
設計番号
仕様、名称
記号 指示 年月日 改訂個所 符号 部品、図面番号 名称 仕様、材質 個数

PCB ID: DE-0301

PART NUMBER:

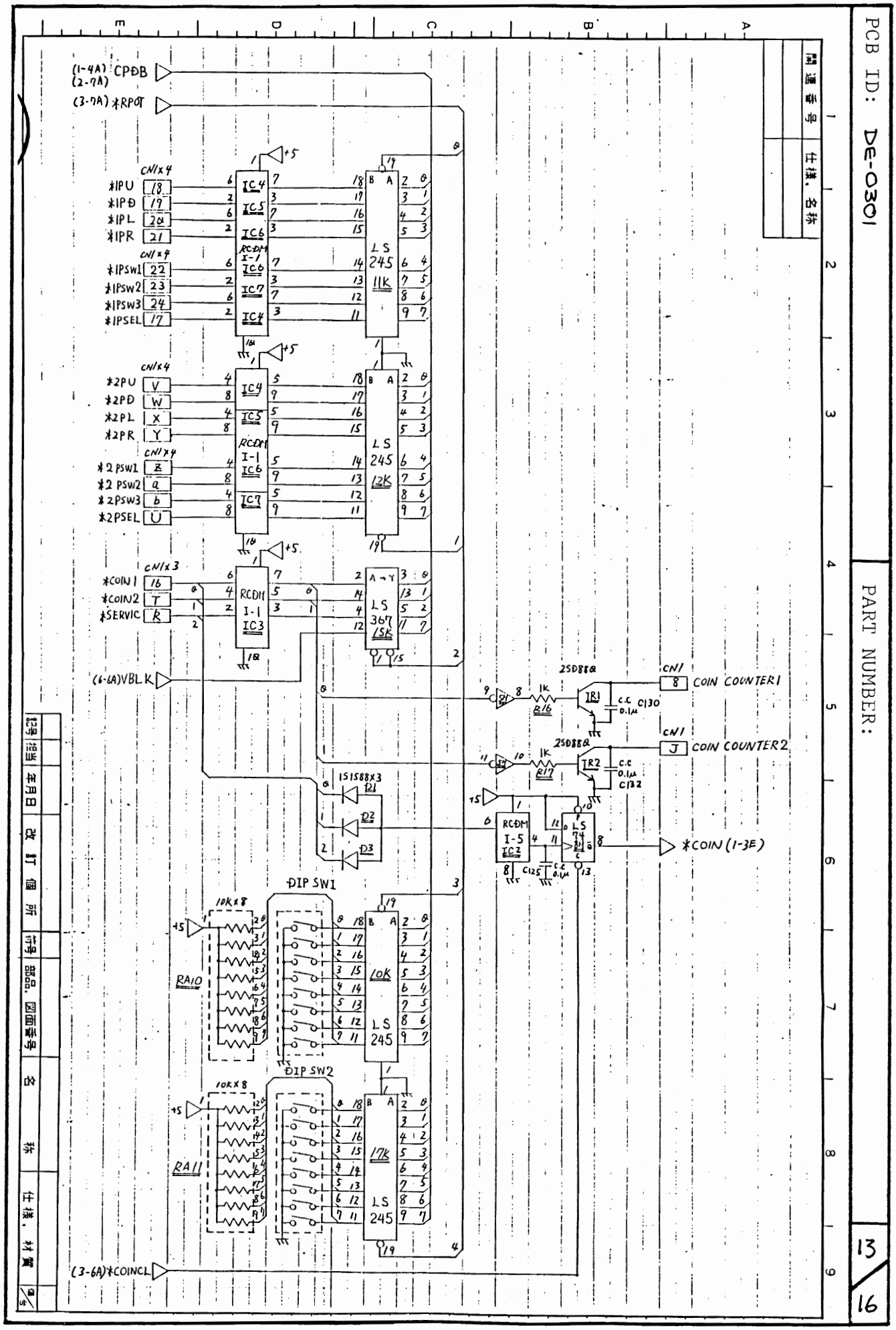

記号	指当	年月日	改訂個所	符号	部品、図面番号	名称	仕様、材質	個数

関連番号	仕様、名称

13
16

PCB ID: DE-0301

PART NUMBER:

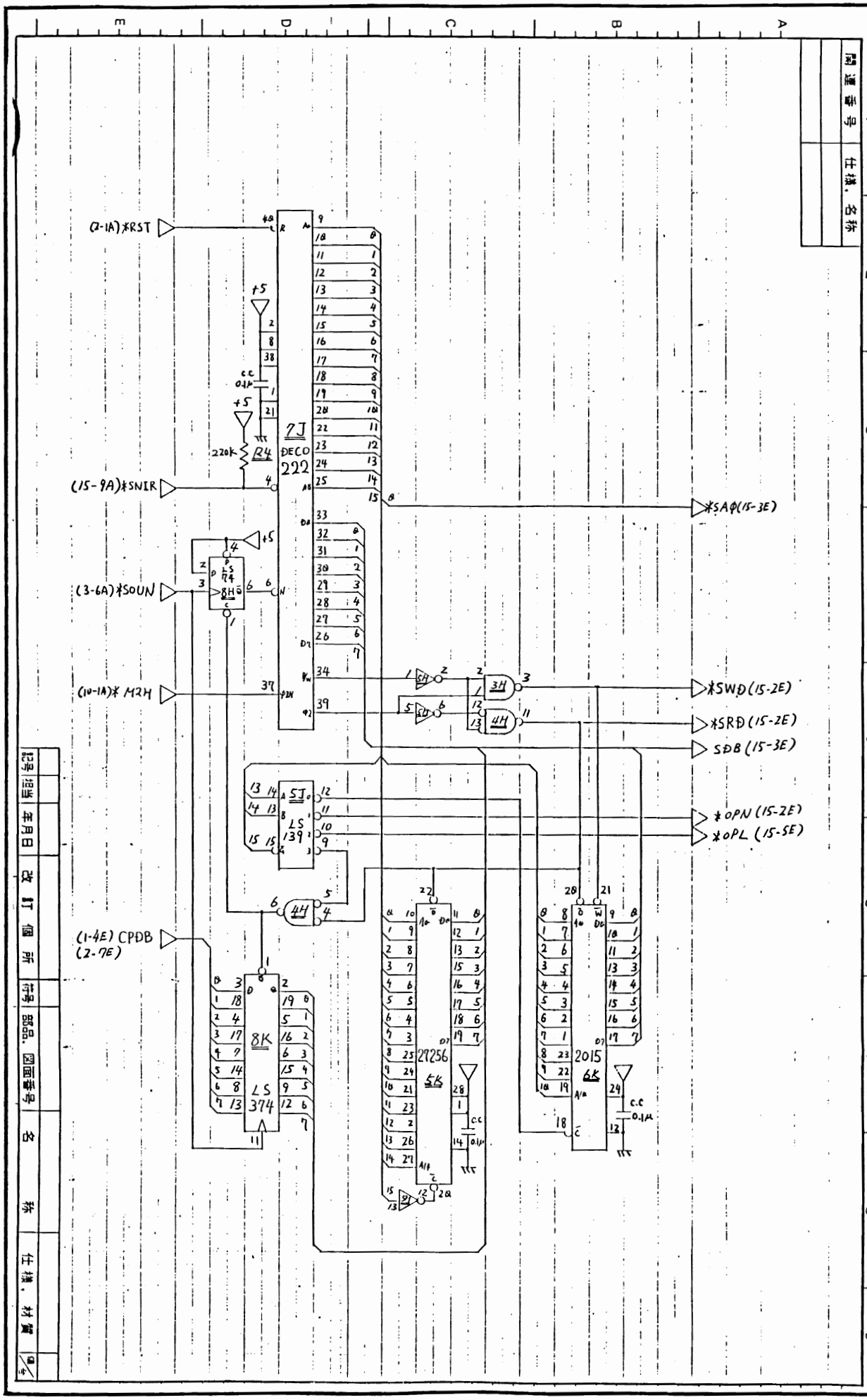

図番	仕様、名称

記号	担当	年月日	改訂個所	符号	部品、図面番号	名称	仕様、材質	個数

PART NUMBER:

14/16

PCB ID: DE-0301

PART NUMBER:

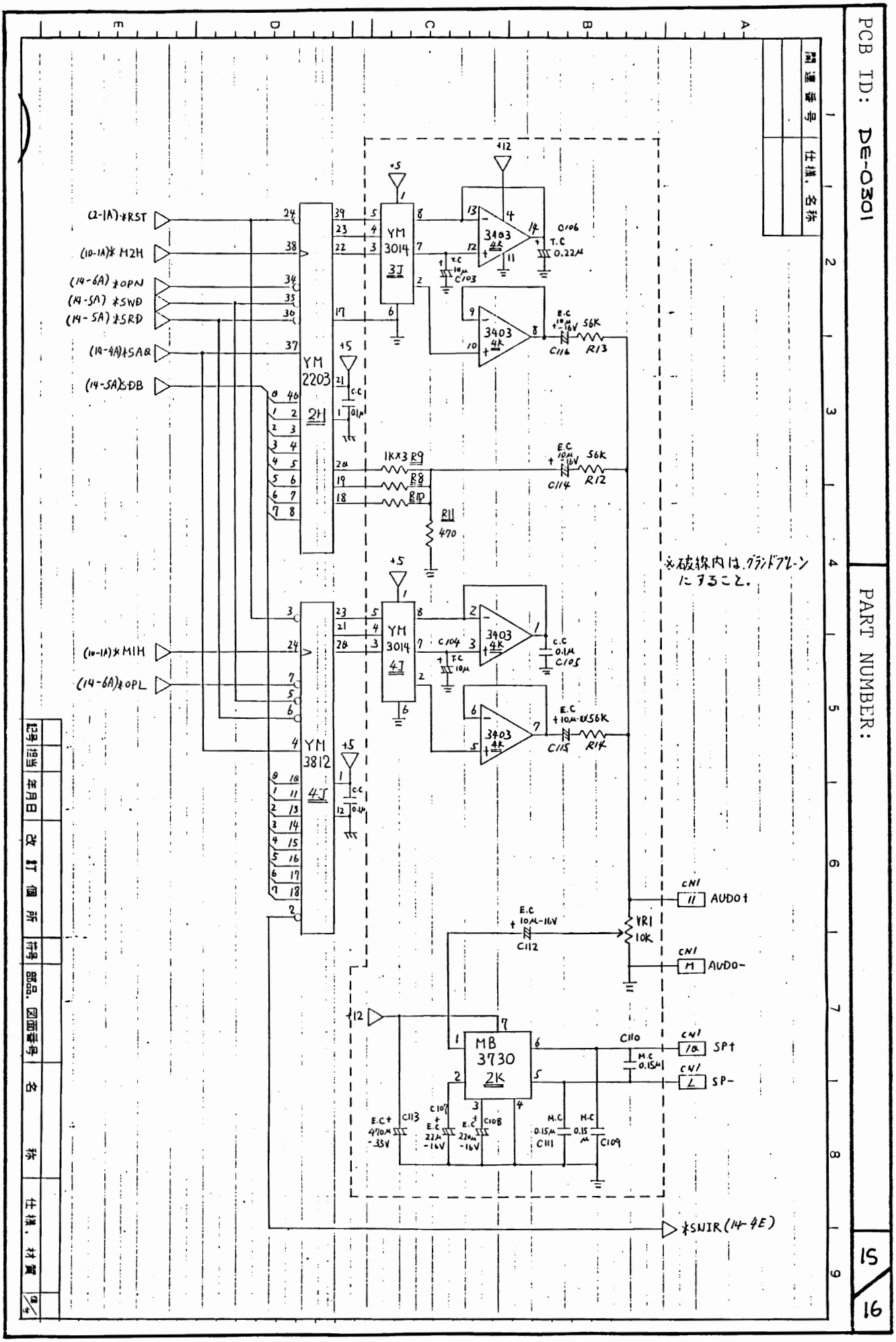

記号	担当	年月日	改訂個所	符号	部品、図面番号	名称	仕様、材質	頁

関連番号	仕様、名称

15/16

PCB ID: DE-0301

PART NUMBER:

図番号	仕様、名称

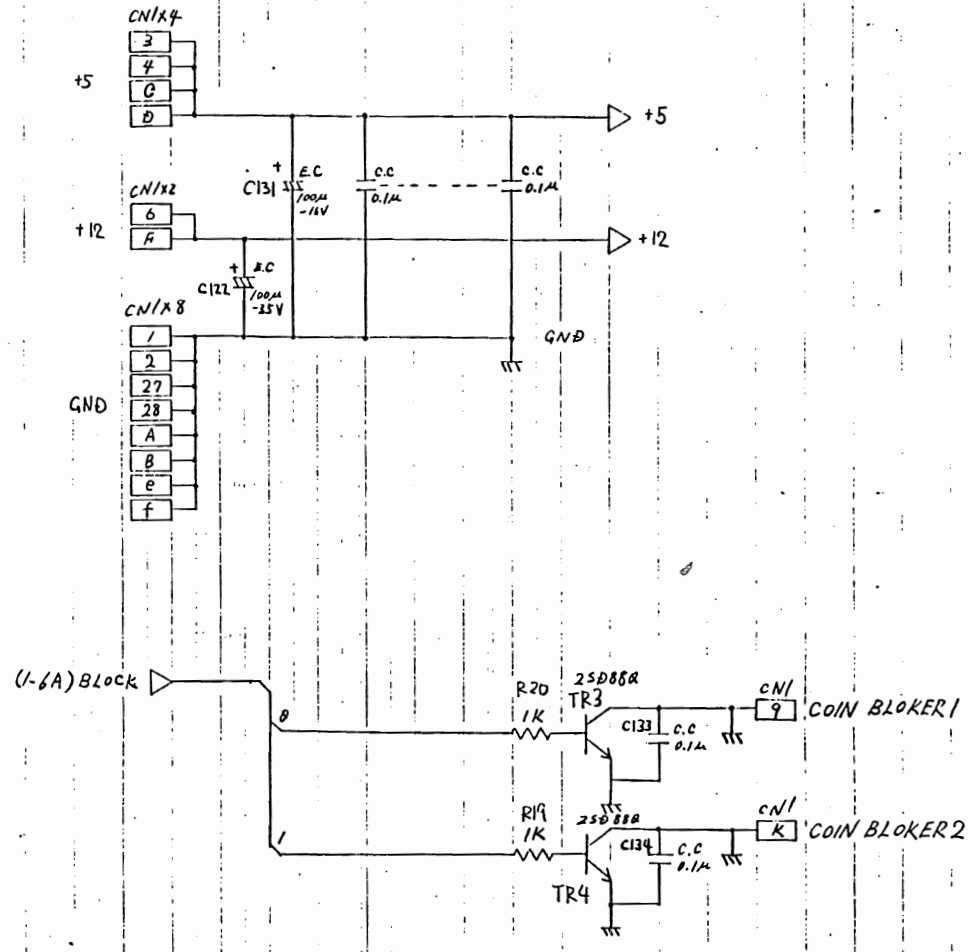

記号	指示	年月日	改訂個所	符号	部品、図面番号	名称	仕様、材質	頁/数