Table of Contents

Sheet 1A	Table of Contents
Sheet 1B	Food Fight Main Wiring Diagram—US (039908-01 A)
Sheet 2A	Food Fight Main Wiring Diagram—Ireland (039998-01 A)
Sheet 2B	Regulator/Audio II PCB Schematic Diagram (035435-01 G), Color Raster Power Supply Wiring Diagram (037669-01 E)
Sheet 3A	Coin Door Wiring Diagram (A037542-01 D), Utility Panel Wiring Diagram (A038004-01 E), Fluorescent Light Wiring Diagram (035833-01 A)
Sheet 3B	EMI Shield Schematic Diagram (037430-04 A)
Sheet 4A	Memory Map
	Game PCB Schematics, Sheets 4B–10B
Sheet 4B	Food Fight Power/Ground and CPU Schematic Diagram
Sheet 5A	Food Fight Reset and Digital I/O Schematic Diagram
Sheet 5B	Food Fight Address Decoder Schematic Diagram
Sheet 6A	Food Fight Memory Schematic Diagram
Sheet 6B	Food Fight Sync Schematic Diagram
Sheet 7A	Food Fight Playfield RAM/ROM Schematic Diagram
Sheet 7B	Food Fight Motion Object RAM Schematic Diagram
Sheet 8A	Food Fight Vertical Position Schematic Diagram
Sheet 8B	Food Fight Motion Object ROM Schematic Diagram
Sheet 9A	Food Fight Line Buffers Schematic Diagram
Sheet 9B	Food Fight Color RAM Schematic Diagram
Sheet 10A	Food Fight Sound Schematic Diagram
Sheet 10B	Food Fight Analog Inputs
	Display Schematics, Sheets 11A–11B
Sheet 11A	Electrohome Display Schematic Diagram (92-049)
Sheet 11B	Matsushita Display Schematic Diagram (139003-1004)

NOTE

This staple temporarily holds the schematic package together. Remove the staple before using these schematics.

Schematic Package Supplement to

Charley Chuck's FOOD FIGHT™

Operators Manual

2M

ATARI INC., 1983

SP-229 Sheet 1A
1st Printing

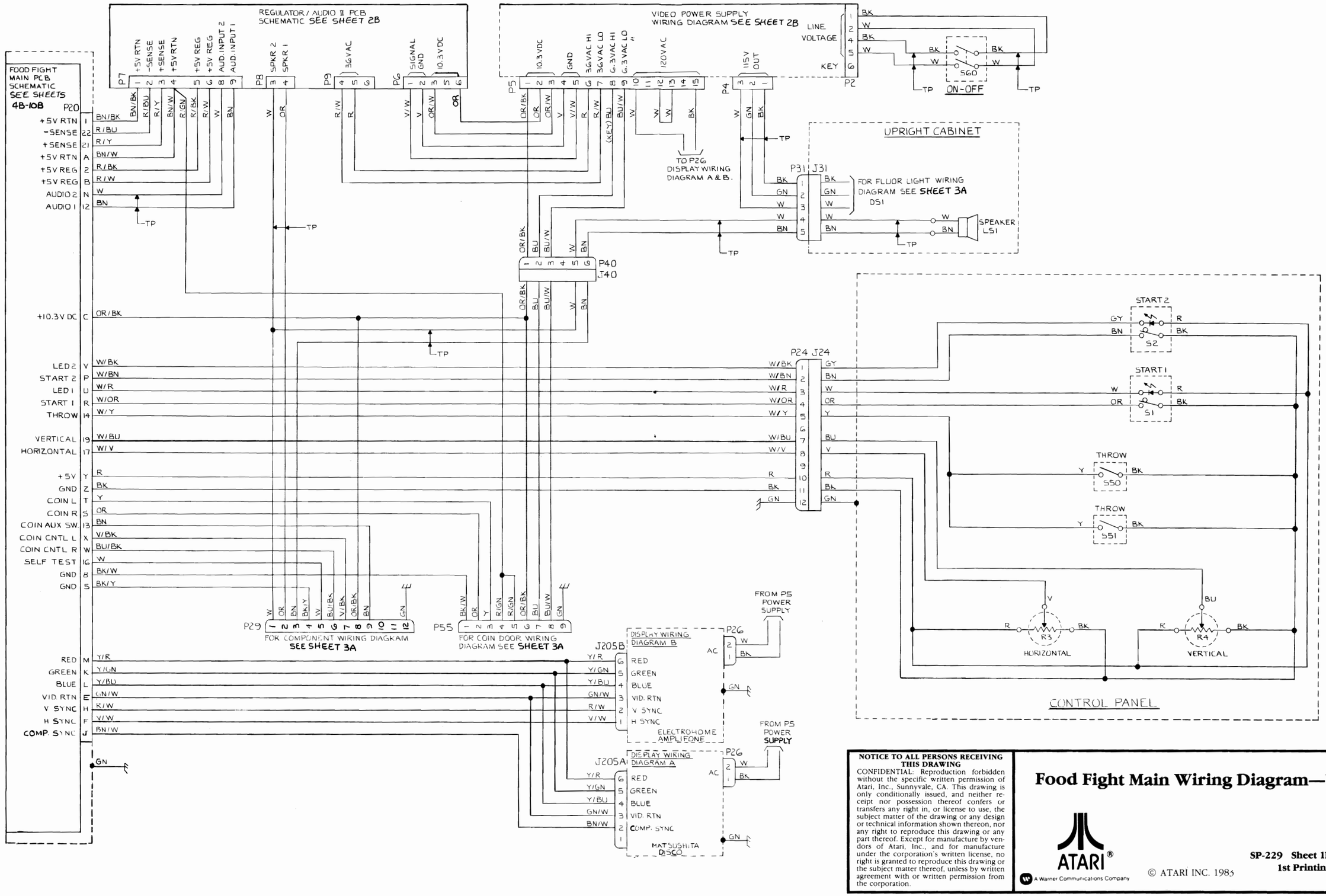

NOTICE TO ALL PERSONS RECEIVING THIS DRAWING

CONFIDENTIAL: Reproduction forbidden without the specific written permission of Atari, Inc., Sunnyvale, CA. This drawing is only conditionally issued, and neither receipt nor possession thereof confers or transfers any right in, or license to use, the subject matter of the drawing or any design or technical information shown thereon, nor any right to reproduce this drawing or any part thereof. Except for manufacture by vendors of Atari, Inc., and for manufacture under the corporation's written license, no right is granted to reproduce this drawing or the subject matter thereof, unless by written agreement with or written permission from the corporation.

Food Fight Main Wiring Diagram—US

ATARI®

A Warner Communications Company

© ATARI INC. 1983

SP-229 Sheet 1B
1st Printing

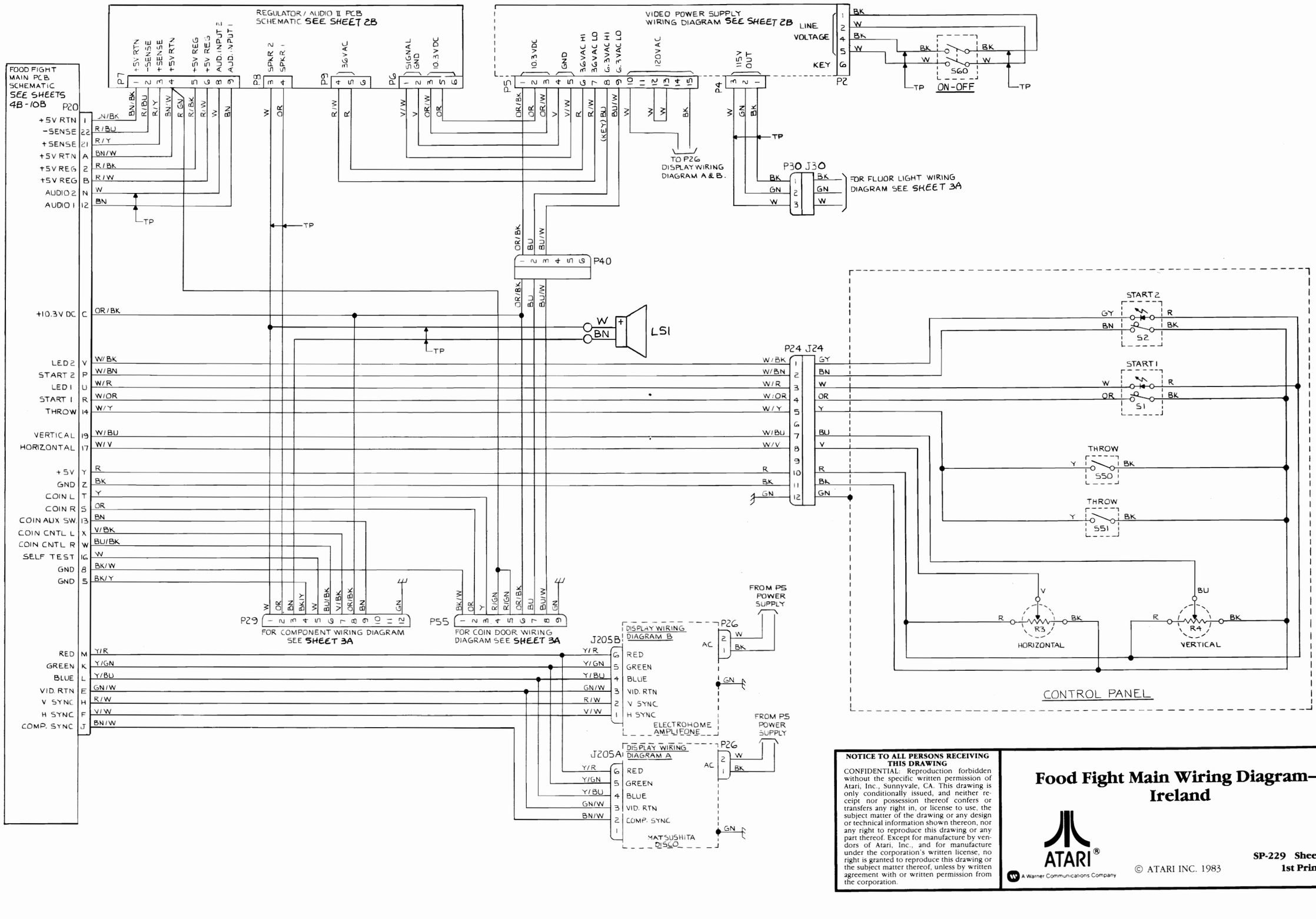

NOTICE TO ALL PERSONS RECEIVING THIS DRAWING

CONFIDENTIAL: Reproduction forbidden without the specific written permission of Atari, Inc., Sunnyvale, CA. This drawing is only conditionally issued, and neither receipt nor possession thereof confers or transfers any right in, or license to use, the subject matter of the drawing or any design or technical information shown thereon, nor any right to reproduce this drawing or any part thereof. Except for manufacture by vendors of Atari, Inc., and for manufacture under the corporation's written license, no right is granted to reproduce this drawing or the subject matter thereof, unless by written agreement with or written permission from the corporation.

Food Fight Main Wiring Diagram—Ireland

ATARI®

A Warner Communications Company

© ATARI INC. 1983

SP-229 Sheet 2A
1st Printing

Regulator/Audio II PCB Schematic Diagram

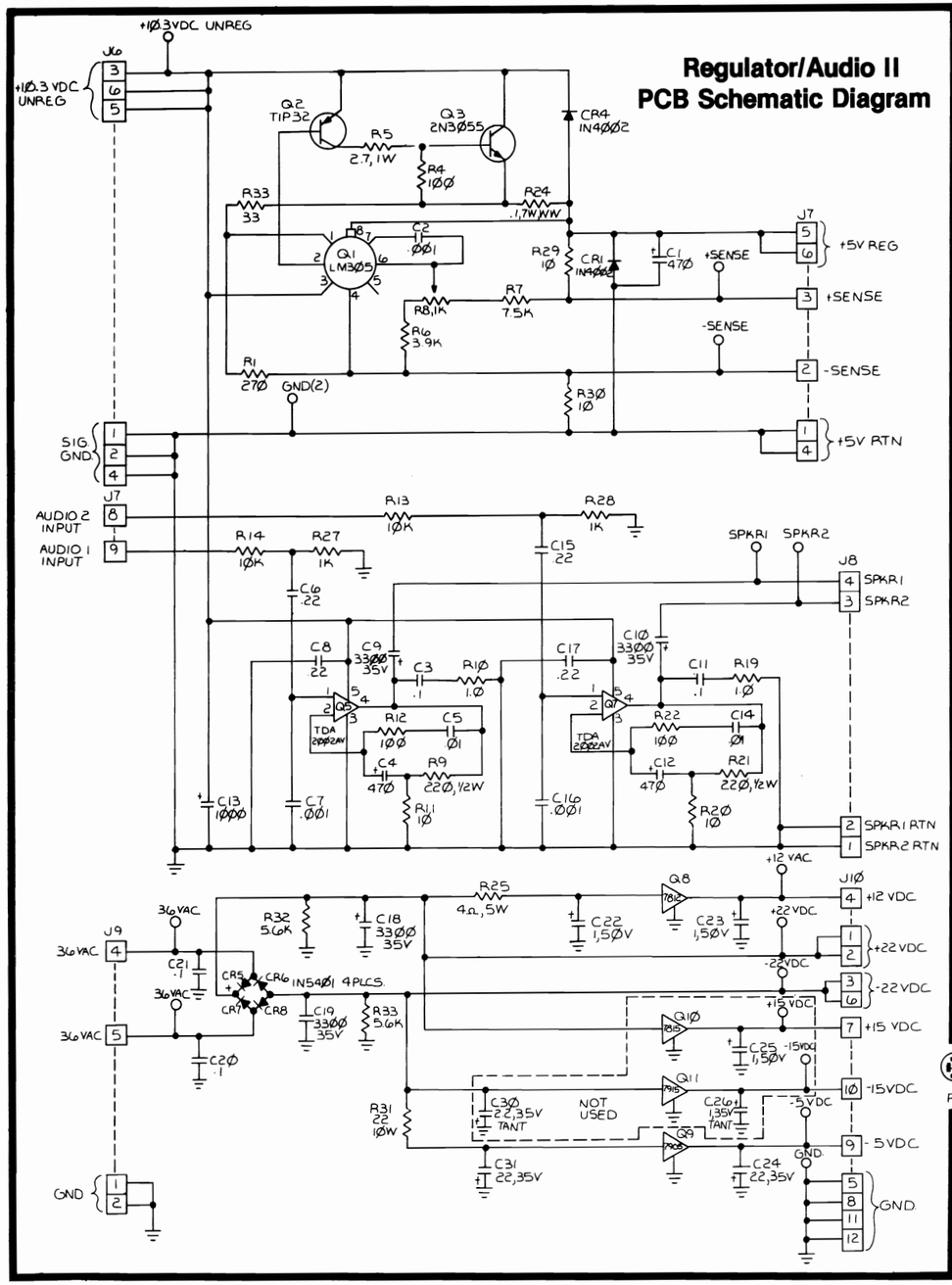

Color Raster Power Supply Diagram

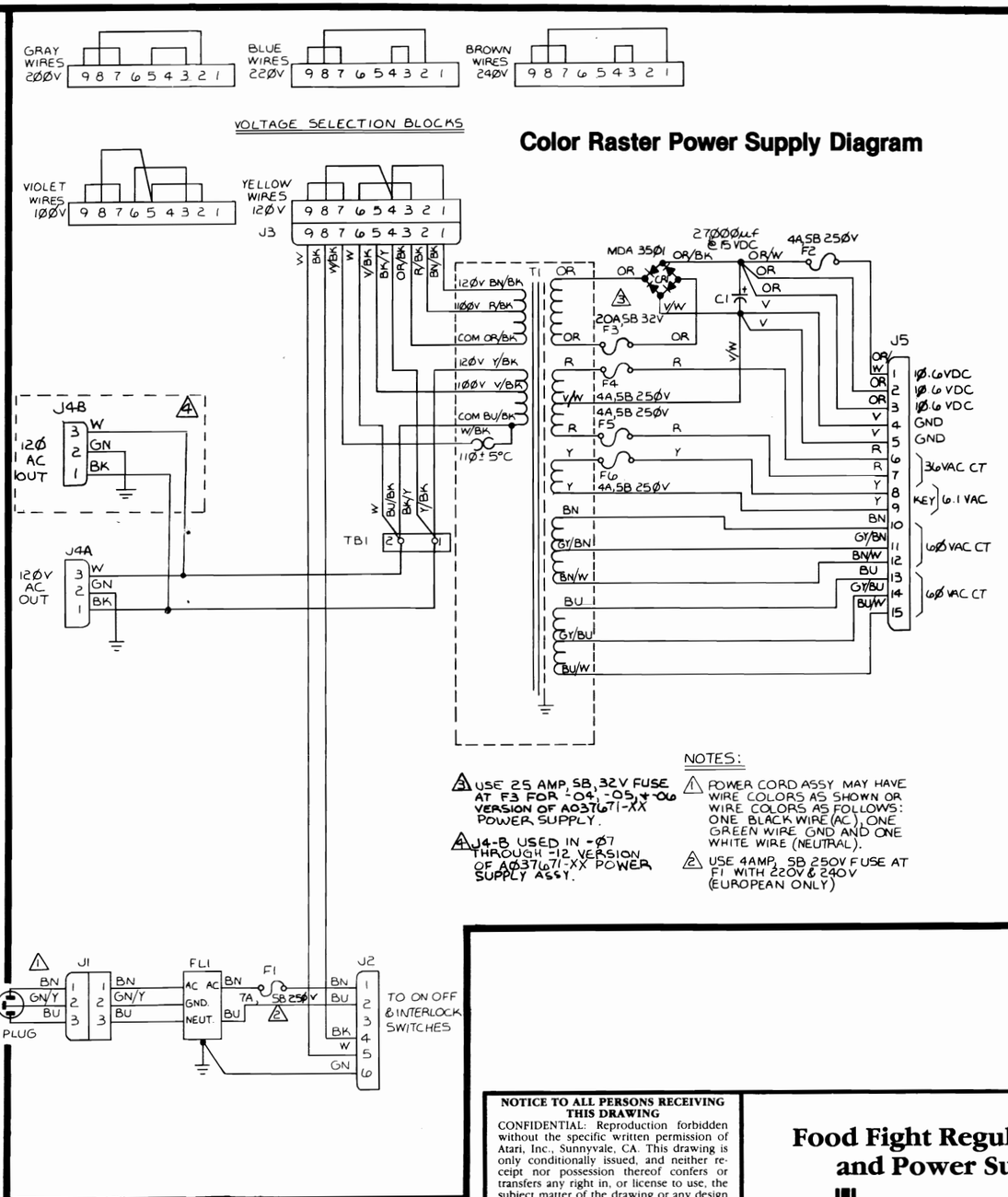

⚠3 USE 25 AMP, SB, 32V FUSE AT F3 FOR -04, -05, & -06 VERSION OF A03761-XX POWER SUPPLY.

⚠4 J4-B USED IN -07 THROUGH -12 VERSION OF A03761-XX POWER SUPPLY ASSY.

NOTES:

⚠1 POWER CORD ASSY MAY HAVE WIRE COLORS AS SHOWN OR WIRE COLORS AS FOLLOWS: ONE BLACK WIRE (AC), ONE GREEN WIRE, GND AND ONE WHITE WIRE (NEUTRAL).

⚠2 USE 4AMP, SB 250V FUSE AT F1 WITH 220V & 240V (EUROPEAN ONLY)

NOTICE TO ALL PERSONS RECEIVING THIS DRAWING

CONFIDENTIAL: Reproduction forbidden without the specific written permission of Atari, Inc., Sunnyvale, CA. This drawing is only conditionally issued, and neither receipt nor possession thereof confers or transfers any right in, or license to use, the subject matter of the drawing or any design or technical information shown thereon, nor any right to reproduce this drawing or any part thereof. Except for manufacture by vendors of Atari, Inc., and for manufacture under the corporation's written license, no right is granted to reproduce this drawing or the subject matter thereof, unless by written agreement with or written permission from the corporation.

Food Fight Regulator/Audio II PCB and Power Supply Diagrams

ATARI®

A Warner Communications Company

© ATARI INC. 1983

SP-229 Sheet 2B
1st Printing

Coin-Door Wiring Diagram

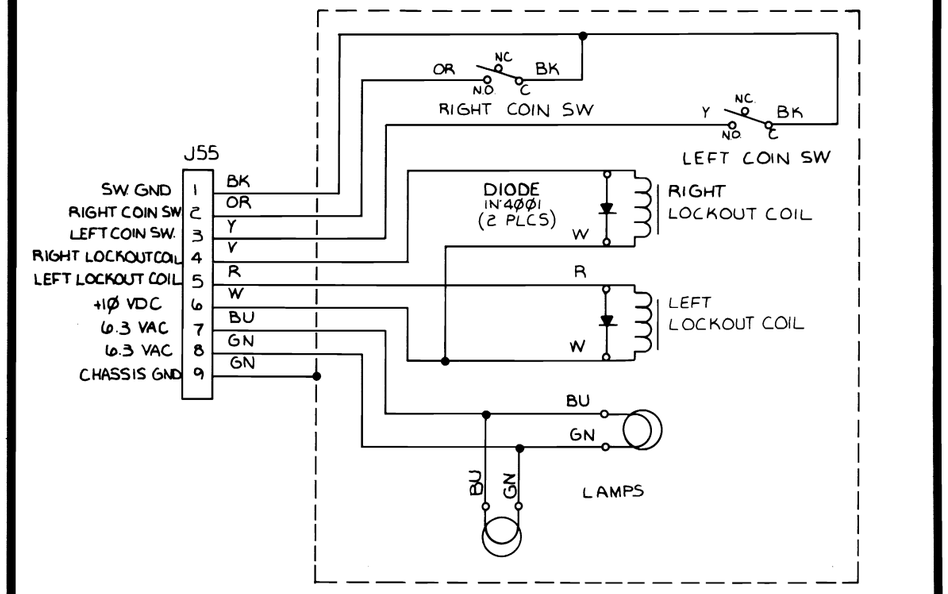

Fluorescent Light Wiring Diagram

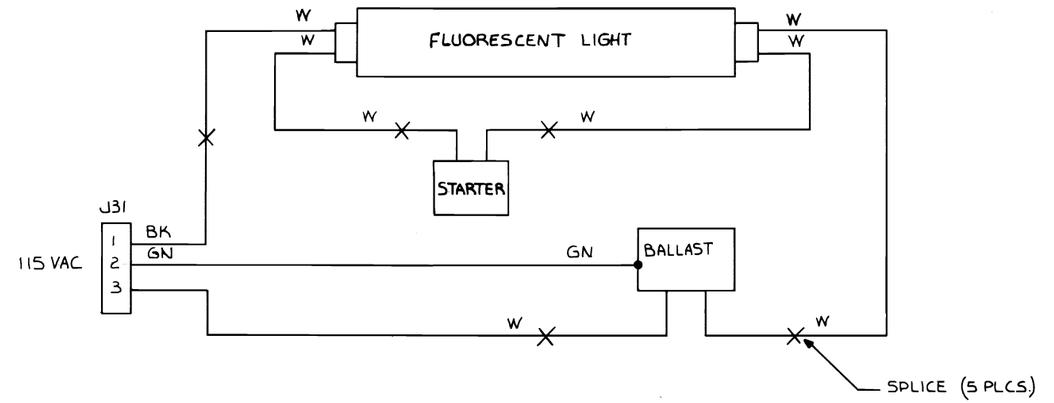

Utility Panel Wiring Diagram

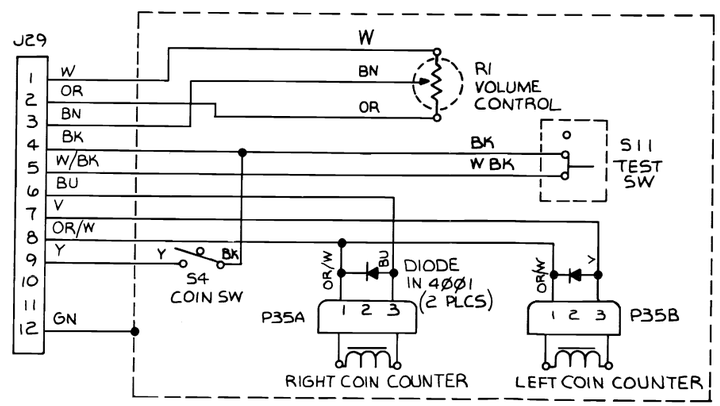

NOTICE TO ALL PERSONS RECEIVING THIS DRAWING

CONFIDENTIAL: Reproduction forbidden without the specific written permission of Atari, Inc., Sunnyvale, CA. This drawing is only conditionally issued, and neither receipt nor possession thereof confers or transfers any right in, or license to use, the subject matter of the drawing or any design or technical information shown thereon, nor any right to reproduce this drawing or any part thereof. Except for manufacture by vendors of Atari, Inc., and for manufacture under the corporation's written license, no right is granted to reproduce this drawing or the subject matter thereof, unless by written agreement with or written permission from the corporation.

Food Fight Game Wiring Interfaces

ATARI®

A Warner Communications Company

© ATARI INC. 1983

SP-229 Sheet 3A
1st Printing

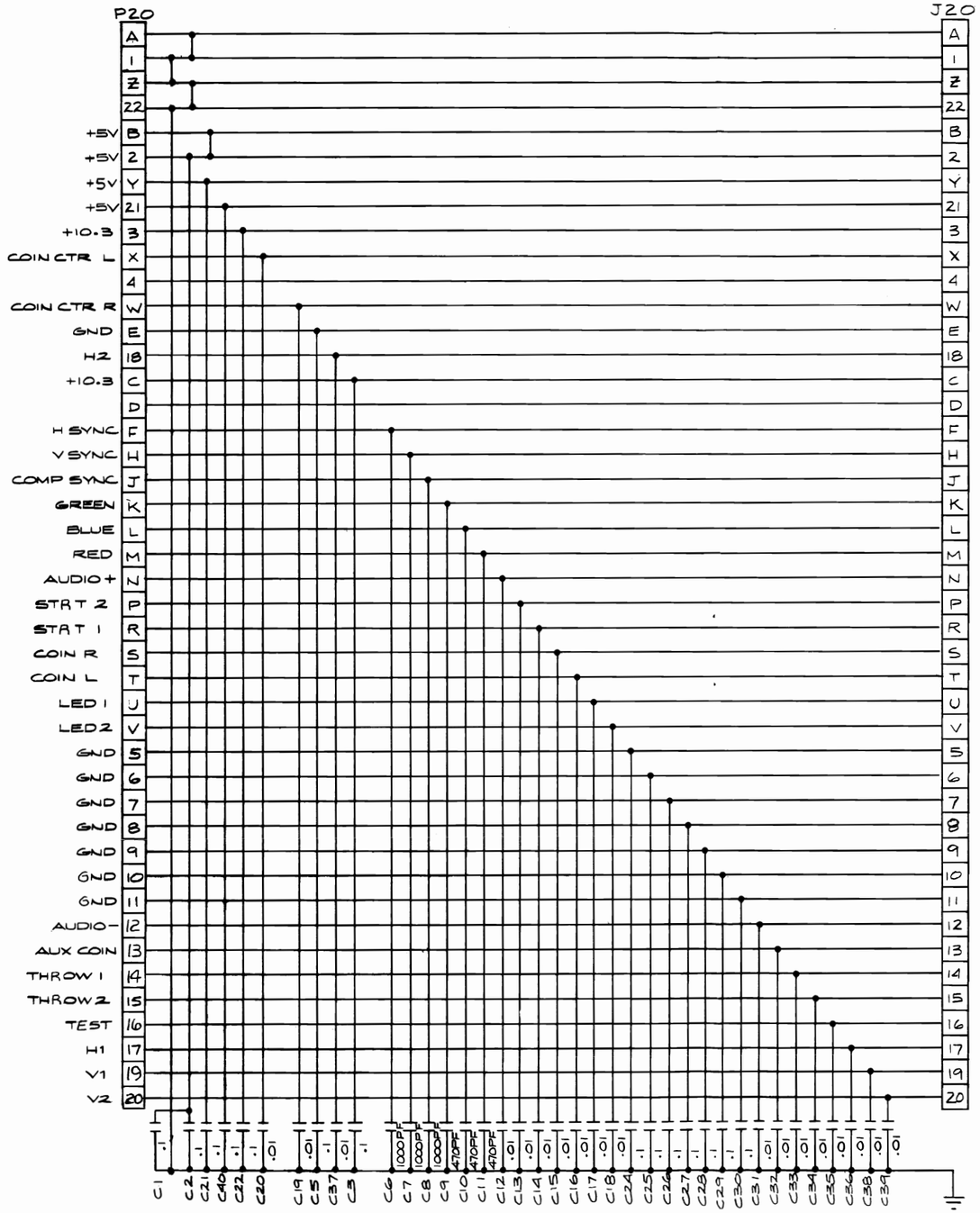

NOTICE TO ALL PERSONS RECEIVING THIS DRAWING

CONFIDENTIAL: Reproduction forbidden without the specific written permission of Atari, Inc., Sunnyvale, CA. This drawing is only conditionally issued, and neither receipt nor possession thereof confers or transfers any right in, or license to use, the subject matter of the drawing or any design or technical information shown thereon, nor any right to reproduce this drawing or any part thereof. Except for manufacture by vendors of Atari, Inc., and for manufacture under the corporation's written license, no right is granted to reproduce this drawing or the subject matter thereof, unless by written agreement with or written permission from the corporation.

EMI Shield Schematic Diagram

ATARI®

A Warner Communications Company

© ATARI INC. 1983

SP-229 Sheet 3B
1st Printing

MEMORY MAP

HEXADECIMAL ADDRESS	ADDRESS BUS SIGNAL LINES																							R/W	DATA BUS SIGNAL LINES																FUNCTION
	A23	A22	A21	A20	A19	A18	A17	A16	A15	A14	A13	A12	A11	A10	A9	A8	A7	A6	A5	A4	A3	A2	A1	A0		D15	D14	D13	D12	D11	D10	D9	D8	D7	D6	D5	D4	D3	D2	D1	D0	
000000-00FFFF	0	0	0	0	0	0	0	0	A	A	A	A	A	A	A	A	A	A	A	A	A	A	A	A	R	D	D	D	D	D	D	D	D	D	D	D	D	D	D	D	D	PROGRAM ROM
014000-01BFFF	0	0	0	0	0	0	0	1	0	1	A	A	A	A	A	A	A	A	A	A	A	A	A	A	R/W	D	D	D	D	D	D	D	D	D	D	D	D	D	D	D	D	PROGRAM RAM
									1	0	A	A	A	A	A	A	A	A	A	A	A	A	A	A	R/W	D	D	D	D	D	D	D	D	D	D	D	D	D	D	D	D	PROGRAM RAM
01C000-01C0FF	0	0	0	0	0	0	0	1	1	1	0	0	0	0	0	0	A	A	A	A	A	A	A	A	R/W	D	D	D	D	D	D	D	D	D	D	D	D	D	D	D	D	MOTION OBJECT RAM
																							0	0									D	D	D	D	D	D	D	D	VERTICAL POSITION
																							0	1		D	D	D	D	D	D	D	D								HORIZONTAL POSITION
																							1	0								D	D	D	D	D	D	D	D		PICTURE
																							1	0		D	D	D	D	D	D	D	D								COLOR
800000-8007FF	1	0	0	0	0	0	0	0	0	0	0	0	0	A	A	A	A	A	A	A	A	A	A	A	R/W	D	D	D	D	D	D	D	D	D	D	D	D	D	D	D	D	PLAYFIELD
900000-9001FF	1	0	0	1	0	0	0	0	0	0	0	0	0	0	0	A	A	A	A	A	A	A	A	A	R/W												D	D	D	D	NVRAM
940000-940007	1	0	0	1	0	1	0	0	0	0	0	0	0	0	0	0	0	0	0	0	0	A	A	A	R								D	D	D	D	D	D	D	D	ANALOG IN
944000-944007								0	0	1	0	0	0	0	0	0	0	0	0	0	0	A	A	A	W																	ANALOG OUT
948000								0	1	0															R																D	COIN 1 (DIGITAL IN)
																									R													D			COIN 2
																									R												D				START 1
																									R											D					START 2
																									R										D						COIN AUX
																									R									D							THROW 1
																									R								D								THROW 2
																									R							D									TEST
																									W													D			PFFLIP
																									W												D				UPDATE
																									W											D					INT3RST
																									W										D						INT4RST
																									W									D							LED 1
																									W								D							LED 2
																									W							D							COUNTERL
																									W						D							COUNTERR
950000-9503FF	1	0	0	1	0	1	0	1	0	0	0	0	0	0	A	A	A	A	A	A	A	A	A	A	W	D	D	D	D	D	D	D	D	D	D	D	D	D	D	D	D	COLORAM
954000								1	0	1															W																	RECALL
958000								1	1	0															W																	WATCHDOG
A40000-A4001F	1	0	1	0	0	1	0	0	0	0	0	0	0	0	0	0	0	0	0	A	A	A	A	A	R/W	D	D	D	D	D	D	D	D	D	D	D	D	D	D	D	D	AUDIO 1
A80000-A8001F	1	0	1	0	1	0	0	0	0	0	0	0	0	0	0	0	0	0	0	A	A	A	A	A	R/W	D	D	D	D	D	D	D	D	D	D	D	D	D	D	D	D	AUDIO 0
	1	0	1	0	1	1	0	0	0	0	0	0	0	0	0	0	0	0	0	A	A	A	A	A	R/W	D	D	D	D	D	D	D	D	D	D	D	D	D	D	D	D	AUDIO 2
000000-7FFFFF	0	A	A	A	A	A	A	A	A	A	A	A	A	A	A	A	A	A	A	A	A	A	A	A	R/W																	DTACK
940000-97FFFF	1	0	0	1	0	1	A	A	A	A	A	A	A	A	A	A	A	A	A	A	A	A	A	A	R/W																	VPA

NOTICE TO ALL PERSONS RECEIVING THIS DRAWING

CONFIDENTIAL: Reproduction forbidden without the specific written permission of Atari, Inc., Sunnyvale, CA. This drawing is only conditionally issued, and neither receipt nor possession thereof confers or transfers any right in, or license to use, the subject matter of the drawing or any design or technical information shown thereon, nor any right to reproduce this drawing or any part thereof. Except for manufacture by vendors of Atari, Inc., and for manufacture under the corporation's written license, no right is granted to reproduce this drawing or the subject matter thereof, unless by written agreement with or written permission from the corporation.

Food Fight Memory Map

ATARI®

A Warner Communications Company

© ATARI INC. 1983

SP-229 Sheet 4A
1st Printing

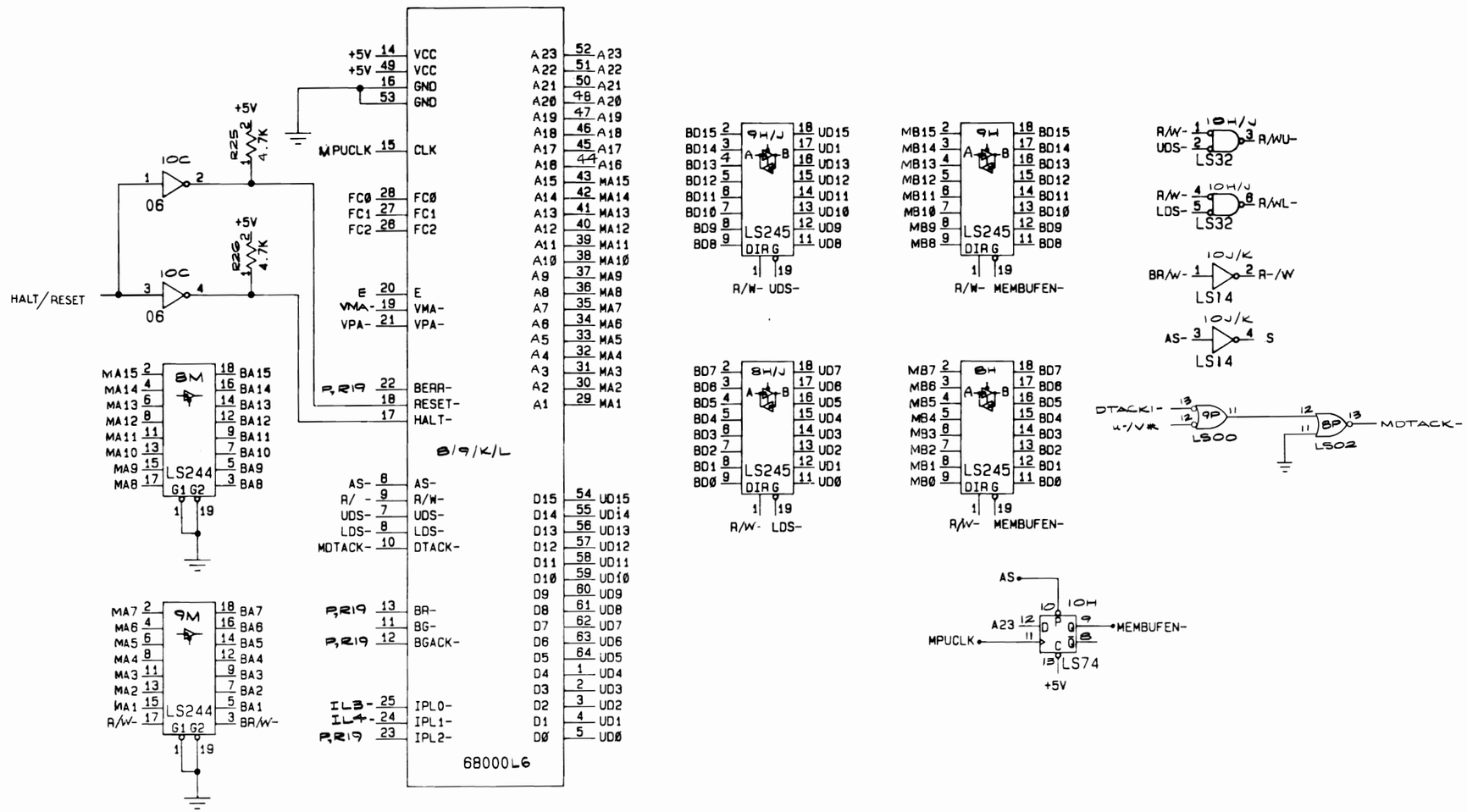

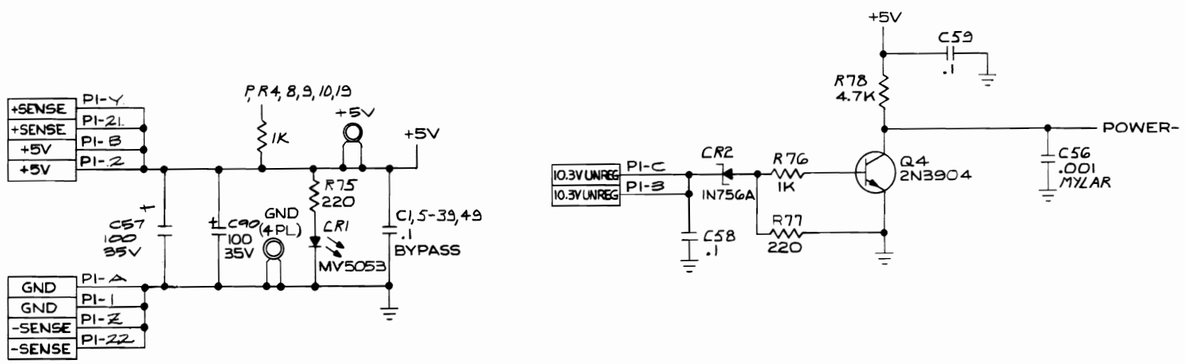

NOTICE TO ALL PERSONS RECEIVING THIS DRAWING

CONFIDENTIAL: Reproduction forbidden without the specific written permission of Atari, Inc., Sunnyvale, CA. This drawing is only conditionally issued, and neither receipt nor possession thereof confers or transfers any right in, or license to use, the subject matter of the drawing or any design or technical information shown thereon, nor any right to reproduce this drawing or any part thereof. Except for manufacture by vendors of Atari, Inc., and for manufacture under the corporation's written license, no right is granted to reproduce this drawing or the subject matter thereof, unless by written agreement with or written permission from the corporation.

Food Fight Power/Ground and CPU Schematic Diagram

ATARI®

A Warner Communications Company

© ATARI INC. 1983

SP-229 Sheet 4B
1st Printing

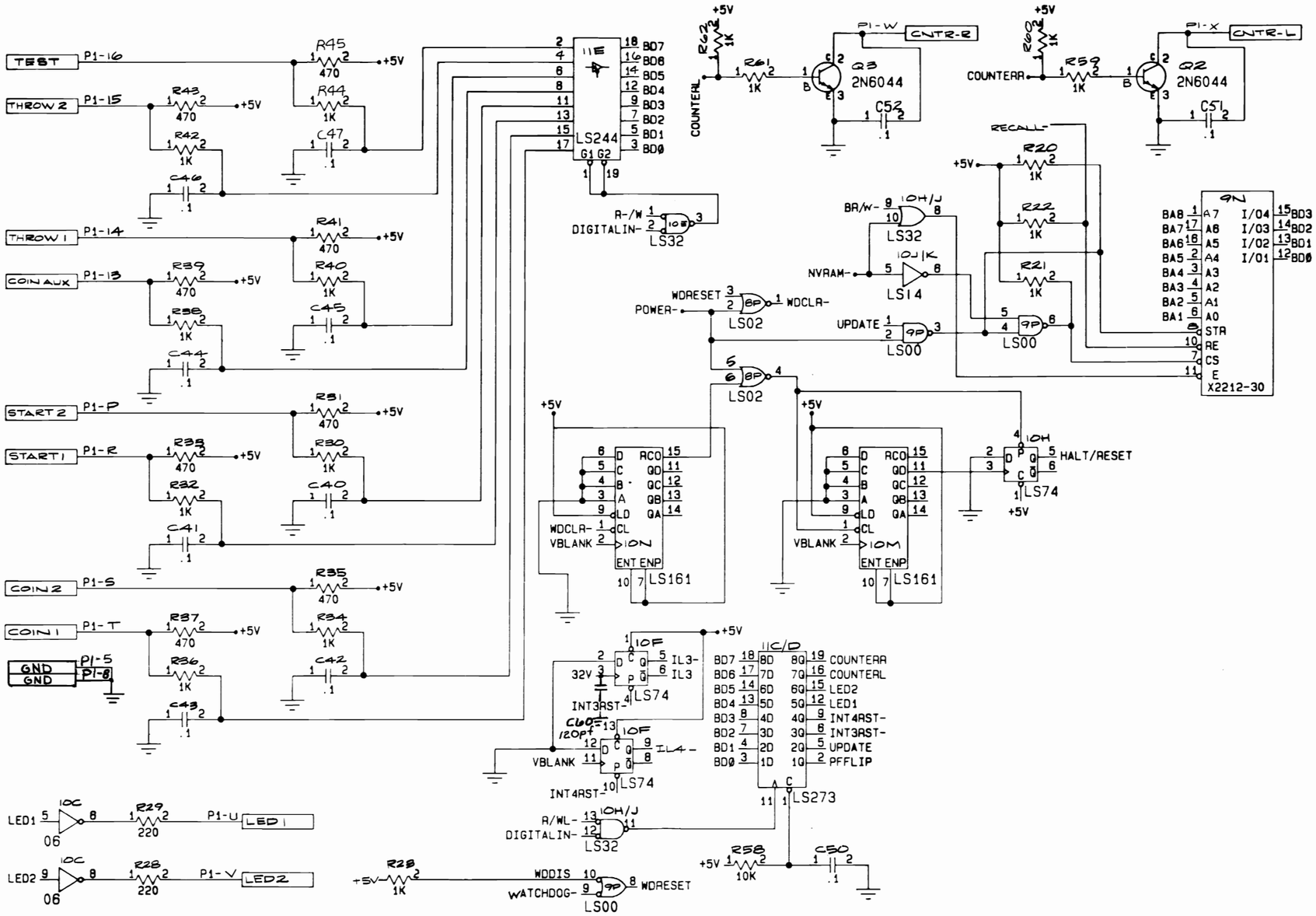

NOTICE TO ALL PERSONS RECEIVING THIS DRAWING

CONFIDENTIAL: Reproduction forbidden without the specific written permission of Atari, Inc., Sunnyvale, CA. This drawing is only conditionally issued, and neither receipt nor possession thereof confers or transfers any right in, or license to use, the subject matter of the drawing or any design or technical information shown thereon, nor any right to reproduce this drawing or any part thereof. Except for manufacture by vendors of Atari, Inc., and for manufacture under the corporation's written license, no right is granted to reproduce this drawing or the subject matter thereof, unless by written agreement with or written permission from the corporation.

Food Fight Reset and Digital I/O Schematic Diagram

ATARI®

A Warner Communications Company

© ATARI INC. 1983

SP-229 Sheet 5A
1st Printing

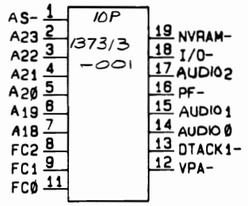

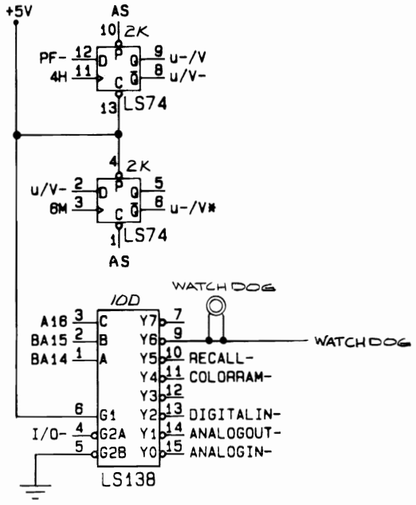

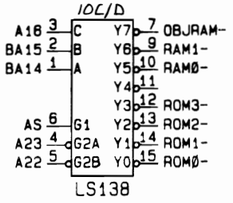

NOTICE TO ALL PERSONS RECEIVING THIS DRAWING

CONFIDENTIAL: Reproduction forbidden without the specific written permission of Atari, Inc., Sunnyvale, CA. This drawing is only conditionally issued, and neither receipt nor possession thereof confers or transfers any right in, or license to use, the subject matter of the drawing or any design or technical information shown thereon, nor any right to reproduce this drawing or any part thereof. Except for manufacture by vendors of Atari, Inc., and for manufacture under the corporation's written license, no right is granted to reproduce this drawing or the subject matter thereof, unless by written agreement with or written permission from the corporation.

Food Fight Address Decoder Schematic Diagram

ATARI®

A Warner Communications Company

© ATARI INC. 1983

SP-229 Sheet 5B
1st Printing

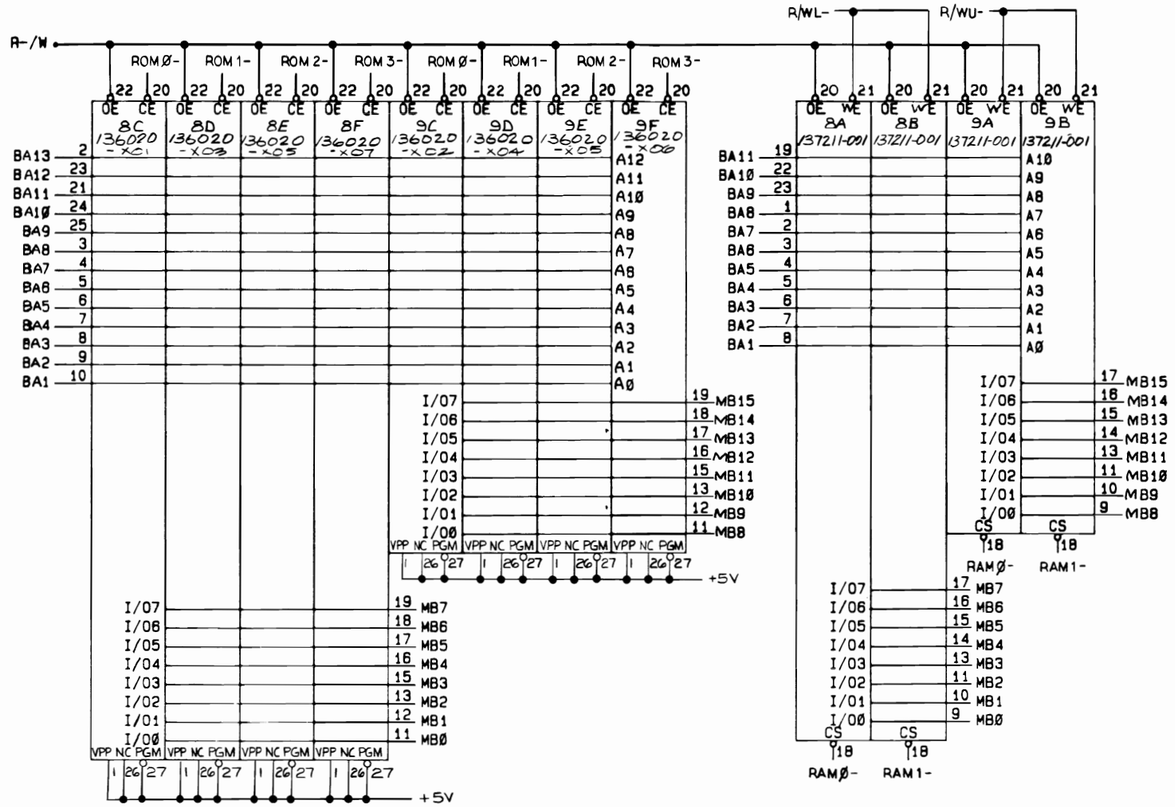

NOTICE TO ALL PERSONS RECEIVING THIS DRAWING

CONFIDENTIAL: Reproduction forbidden without the specific written permission of Atari, Inc., Sunnyvale, CA. This drawing is only conditionally issued, and neither receipt nor possession thereof confers or transfers any right in, or license to use, the subject matter of the drawing or any design or technical information shown thereon, nor any right to reproduce this drawing or any part thereof. Except for manufacture by vendors of Atari, Inc., and for manufacture under the corporation's written license, no right is granted to reproduce this drawing or the subject matter thereof, unless by written agreement with or written permission from the corporation.

Food Fight Memory Schematic Diagram

ATARI®

A Warner Communications Company

© ATARI INC. 1983

SP-229 Sheet 6A

1st Printing

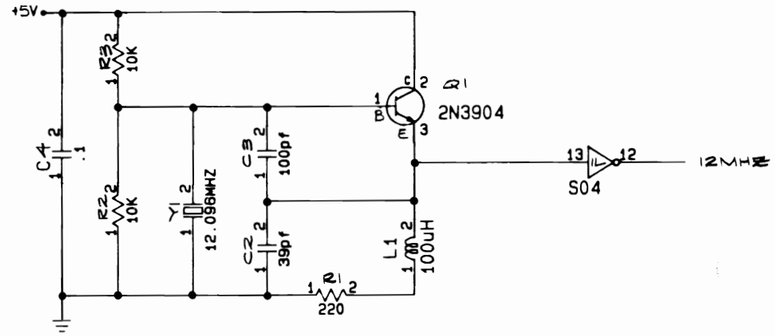

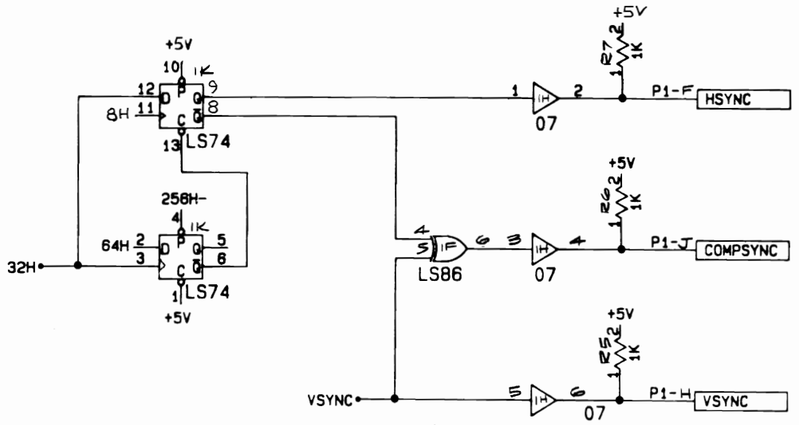

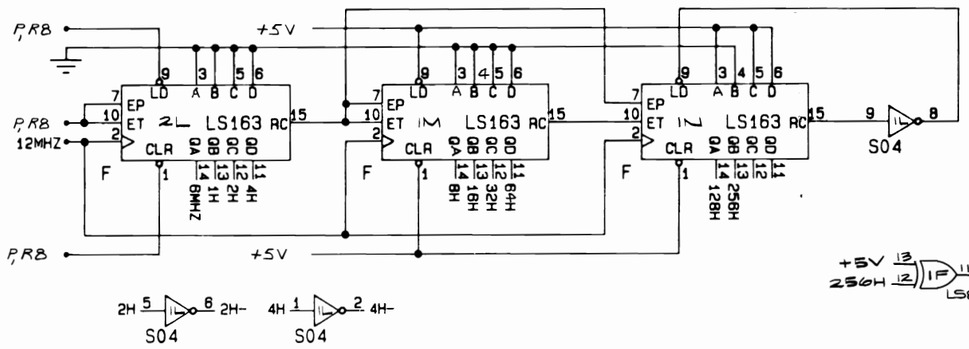

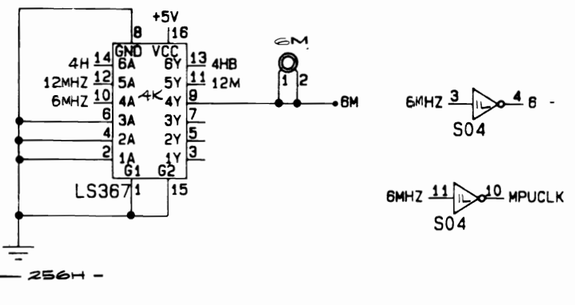

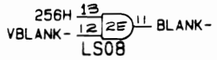

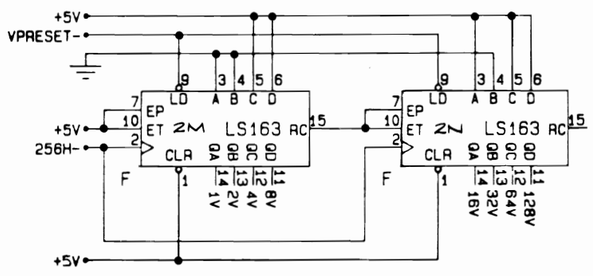

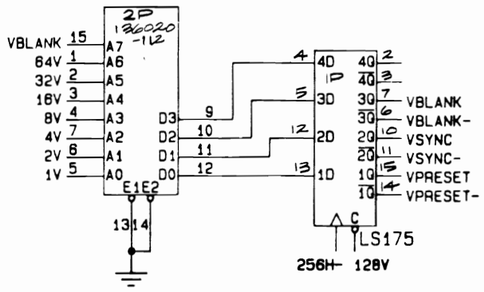

NOTICE TO ALL PERSONS RECEIVING THIS DRAWING

CONFIDENTIAL: Reproduction forbidden without the specific written permission of Atari, Inc., Sunnyvale, CA. This drawing is only conditionally issued, and neither receipt nor possession thereof confers or transfers any right in, or license to use, the subject matter of the drawing or any design or technical information shown thereon, nor any right to reproduce this drawing or any part thereof. Except for manufacture by vendors of Atari, Inc., and for manufacture under the corporation's written license, no right is granted to reproduce this drawing or the subject matter thereof, unless by written agreement with or written permission from the corporation.

Food Fight Sync Schematic Diagram

ATARI®

A Warner Communications Company

© ATARI INC. 1983

SP-229 Sheet 6B
1st Printing

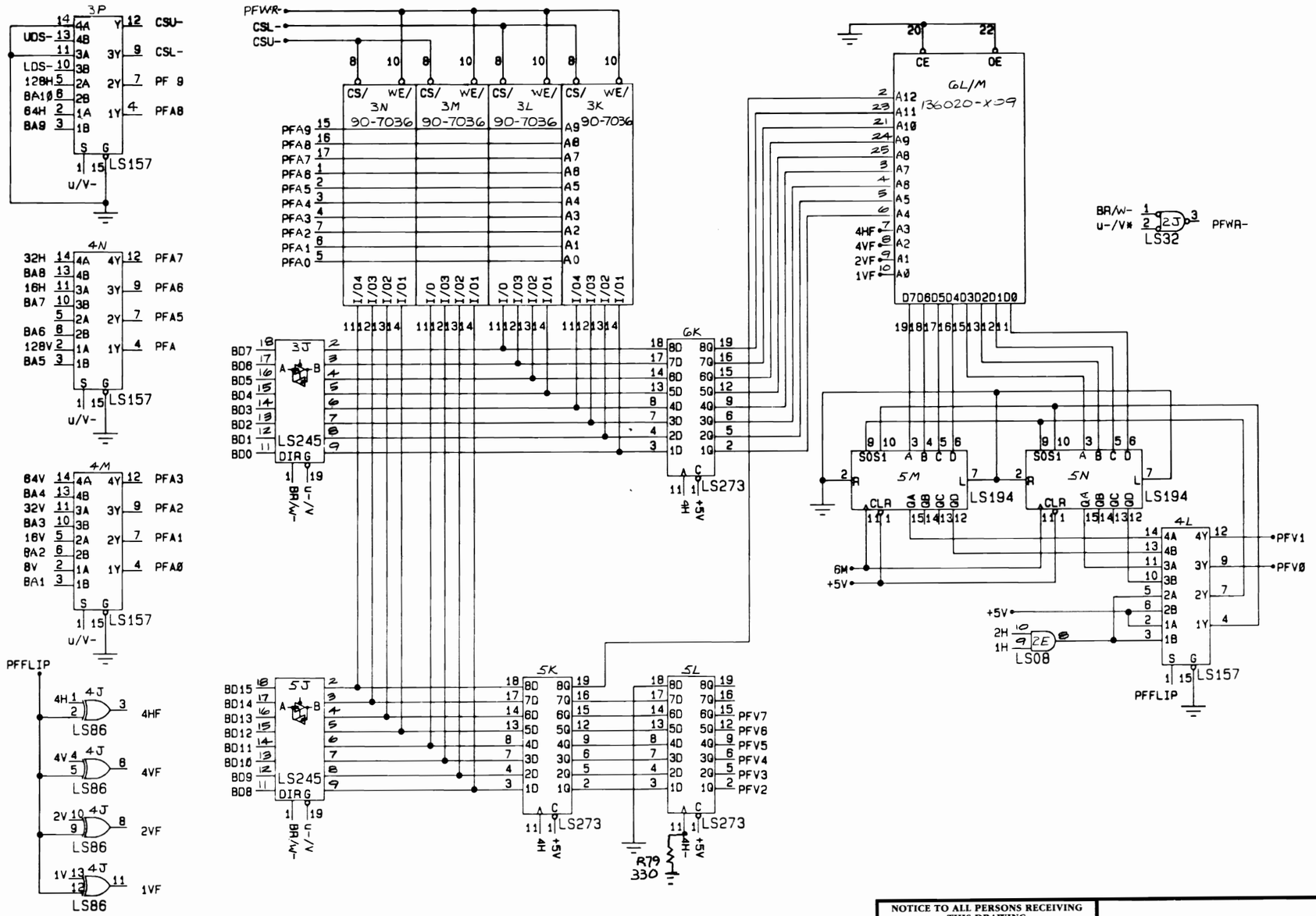

NOTICE TO ALL PERSONS RECEIVING THIS DRAWING

CONFIDENTIAL: Reproduction forbidden without the specific written permission of Atari, Inc., Sunnyvale, CA. This drawing is only conditionally issued, and neither receipt nor possession thereof confers or transfers any right in, or license to use, the subject matter of the drawing or any design or technical information shown thereon, nor any right to reproduce this drawing or any part thereof. Except for manufacture by vendors of Atari, Inc., and for manufacture under the corporation's written license, no right is granted to reproduce this drawing or the subject matter thereof, unless by written agreement with or written permission from the corporation.

Food Fight Playfield RAM/ROM Schematic Diagram

ATARI®

A Warner Communications Company

© ATARI INC. 1983

SP-229 Sheet 7A
1st Printing

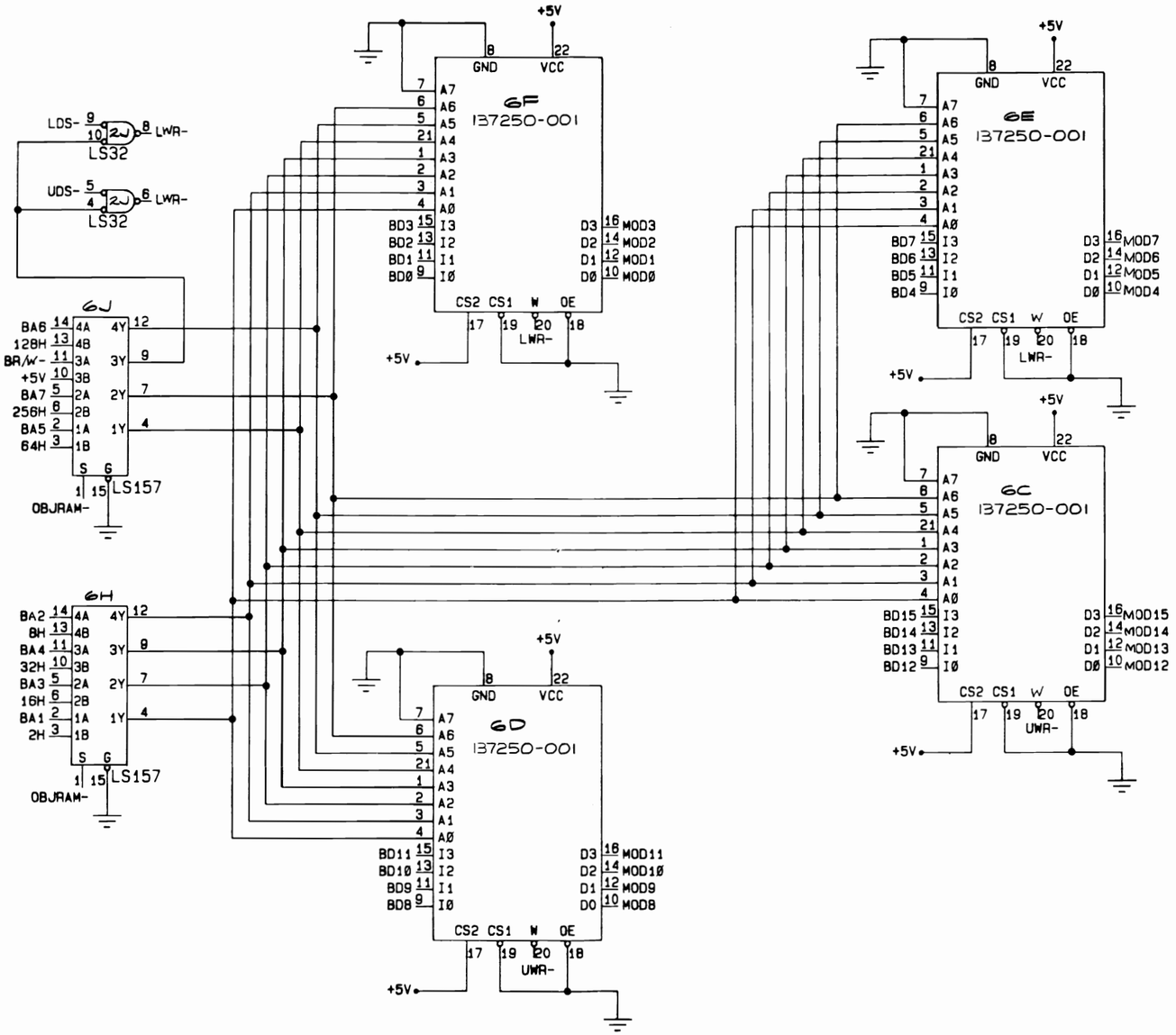

NOTICE TO ALL PERSONS RECEIVING THIS DRAWING

CONFIDENTIAL: Reproduction forbidden without the specific written permission of Atari, Inc., Sunnyvale, CA. This drawing is only conditionally issued, and neither receipt nor possession thereof confers or transfers any right in, or license to use, the subject matter of the drawing or any design or technical information shown thereon, nor any right to reproduce this drawing or any part thereof. Except for manufacture by vendors of Atari, Inc., and for manufacture under the corporation's written license, no right is granted to reproduce this drawing or the subject matter thereof, unless by written agreement with or written permission from the corporation.

Food Fight Motion Object RAM Schematic Diagram

ATARI®

A Warner Communications Company

© ATARI INC. 1983

SP-229 Sheet 7B
1st Printing

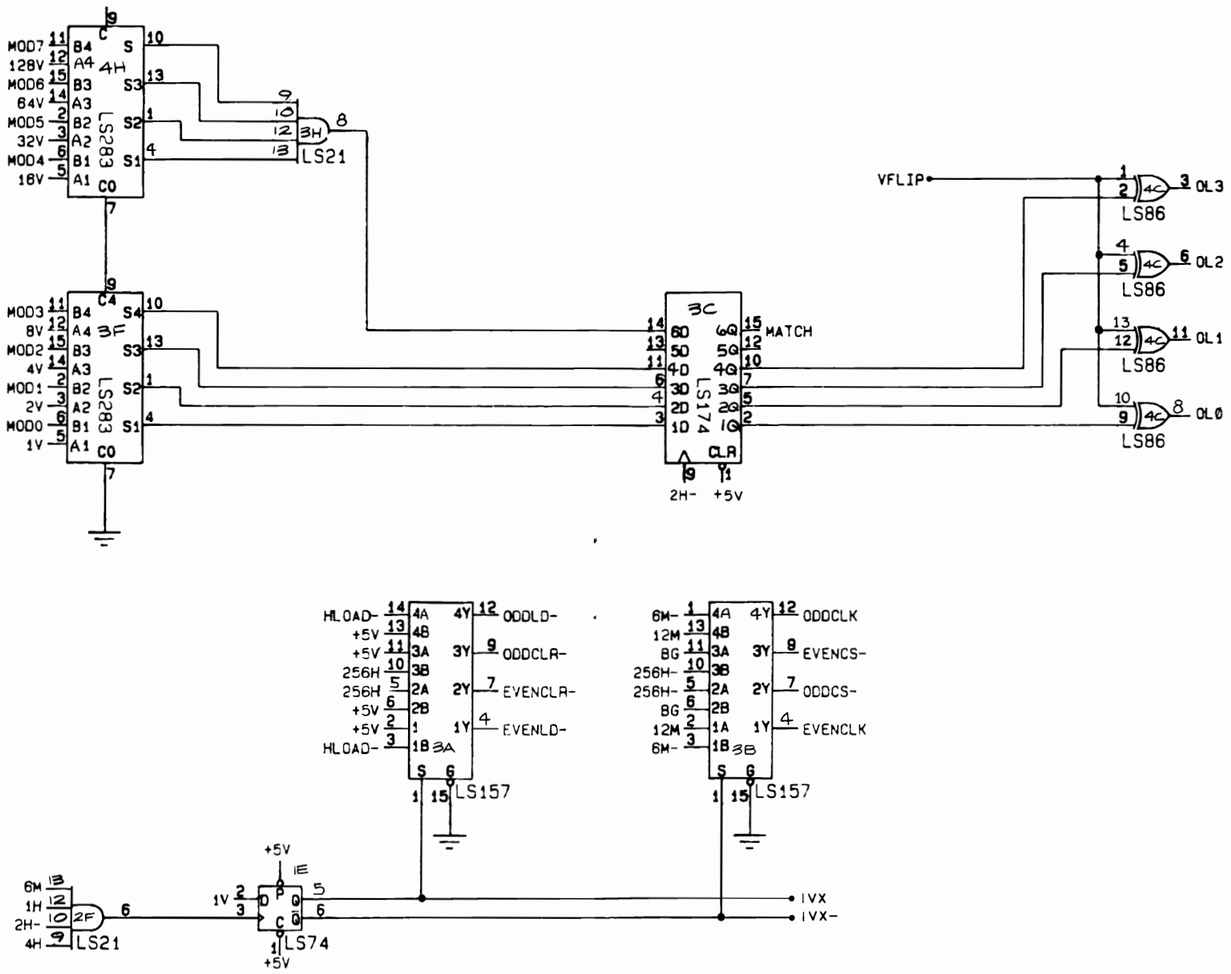

NOTICE TO ALL PERSONS RECEIVING THIS DRAWING

CONFIDENTIAL: Reproduction forbidden without the specific written permission of Atari, Inc., Sunnyvale, CA. This drawing is only conditionally issued, and neither receipt nor possession thereof confers or transfers any right in, or license to use, the subject matter of the drawing or any design or technical information shown thereon, nor any right to reproduce this drawing or any part thereof. Except for manufacture by vendors of Atari, Inc., and for manufacture under the corporation's written license, no right is granted to reproduce this drawing or the subject matter thereof, unless by written agreement with or written permission from the corporation.

Food Fight Vertical Position Schematic Diagram

ATARI®

A Warner Communications Company

© ATARI INC. 1983

SP-229 Sheet 8A

1st Printing

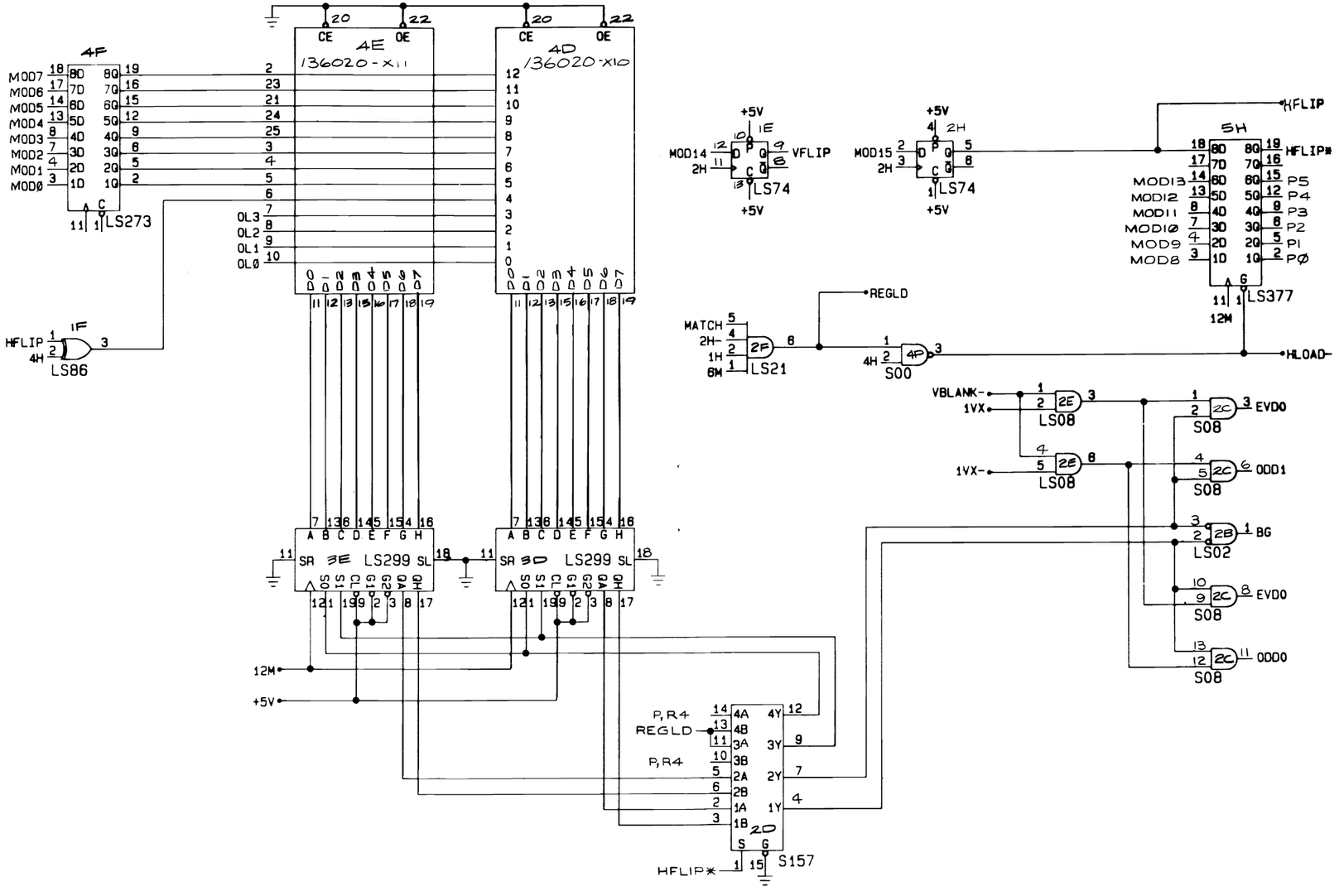

NOTICE TO ALL PERSONS RECEIVING THIS DRAWING

CONFIDENTIAL: Reproduction forbidden without the specific written permission of Atari, Inc., Sunnyvale, CA. This drawing is only conditionally issued, and neither receipt nor possession thereof confers or transfers any right in, or license to use, the subject matter of the drawing or any design or technical information shown thereon, nor any right to reproduce this drawing or any part thereof. Except for manufacture by vendors of Atari, Inc., and for manufacture under the corporation's written license, no right is granted to reproduce this drawing or the subject matter thereof, unless by written agreement with or written permission from the corporation.

Food Fight Motion-Object ROM Schematic Diagram

ATARI®

A Warner Communications Company

© ATARI INC. 1983

SP-229 Sheet 8B
1st Printing

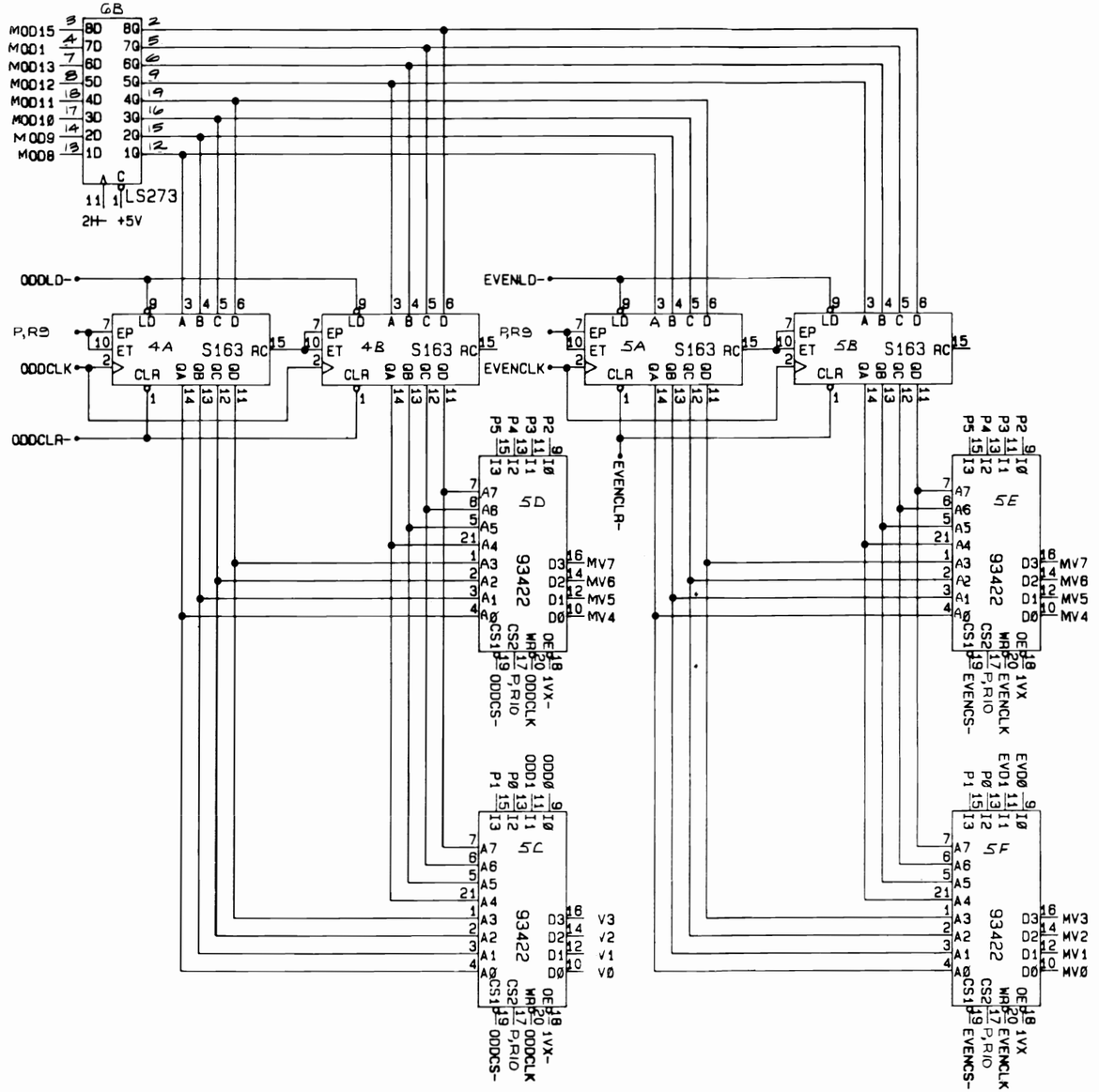

NOTICE TO ALL PERSONS RECEIVING THIS DRAWING

CONFIDENTIAL: Reproduction forbidden without the specific written permission of Atari, Inc., Sunnyvale, CA. This drawing is only conditionally issued, and neither receipt nor possession thereof confers or transfers any right in, or license to use, the subject matter of the drawing or any design or technical information shown thereon, nor any right to reproduce this drawing or any part thereof. Except for manufacture by vendors of Atari, Inc., and for manufacture under the corporation's written license, no right is granted to reproduce this drawing or the subject matter thereof, unless by written agreement with or written permission from the corporation.

Food Fight Line Buffers Schematic Diagram

ATARI®

A Warner Communications Company

© ATARI INC. 1983

SP-229 Sheet 9A
1st Printing

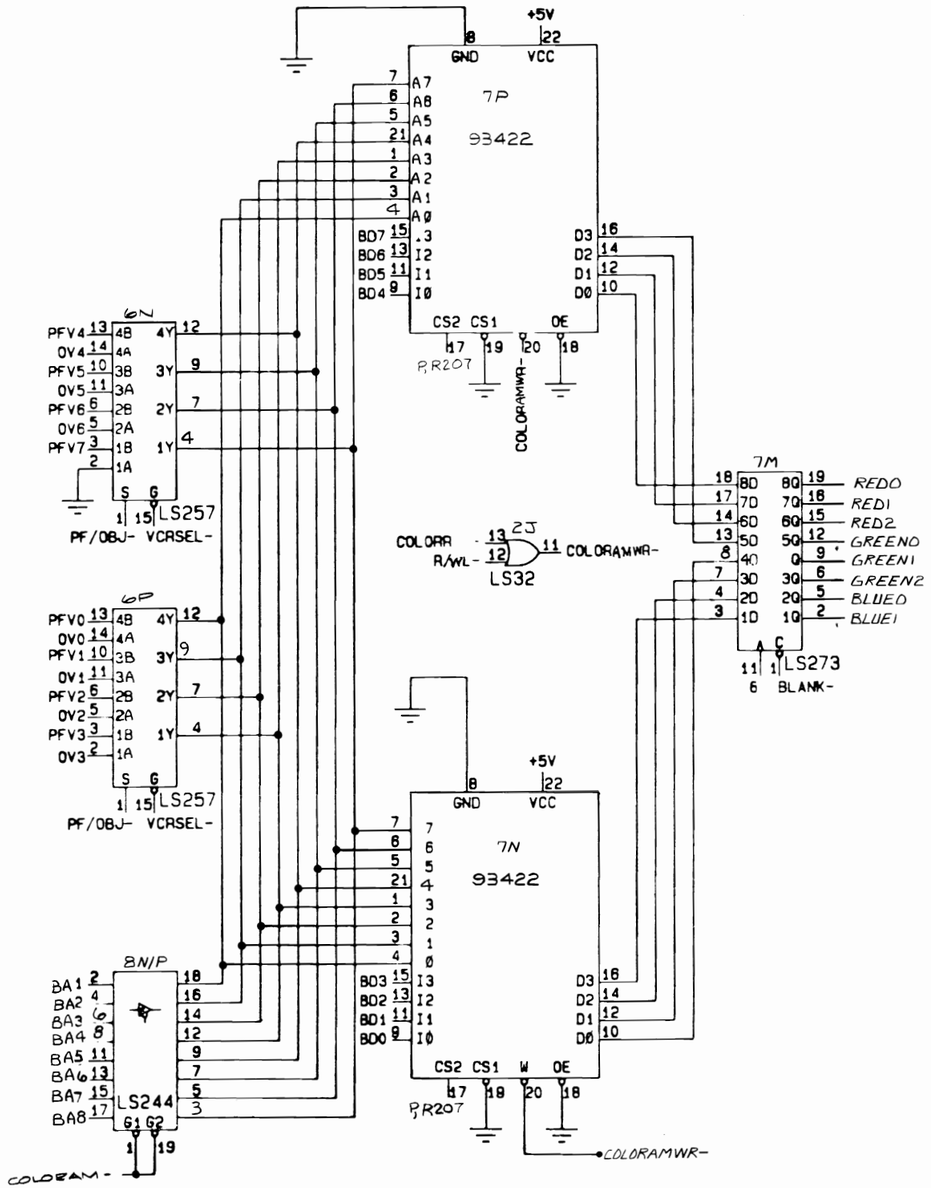

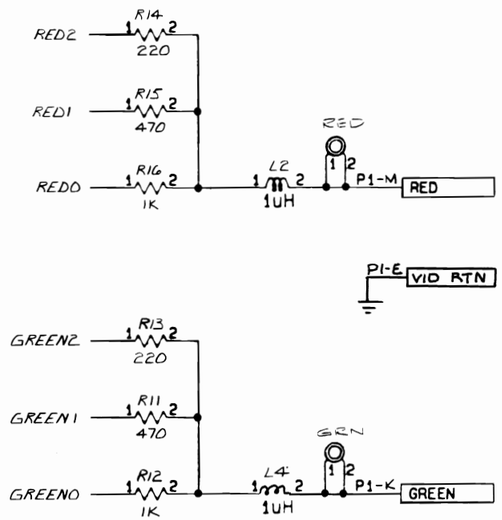

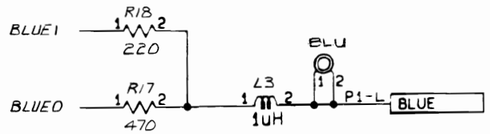

NOTICE TO ALL PERSONS RECEIVING THIS DRAWING

CONFIDENTIAL: Reproduction forbidden without the specific written permission of Atari, Inc., Sunnyvale, CA. This drawing is only conditionally issued, and neither receipt nor possession thereof confers or transfers any right in, or license to use, the subject matter of the drawing or any design or technical information shown thereon, nor any right to reproduce this drawing or any part thereof. Except for manufacture by vendors of Atari, Inc., and for manufacture under the corporation's written license, no right is granted to reproduce this drawing or the subject matter thereof, unless by written agreement with or written permission from the corporation.

Food Fight Color RAM Schematic Diagram

ATARI®

A Warner Communications Company

© ATARI INC. 1983

SP-229 Sheet 9B
1st Printing

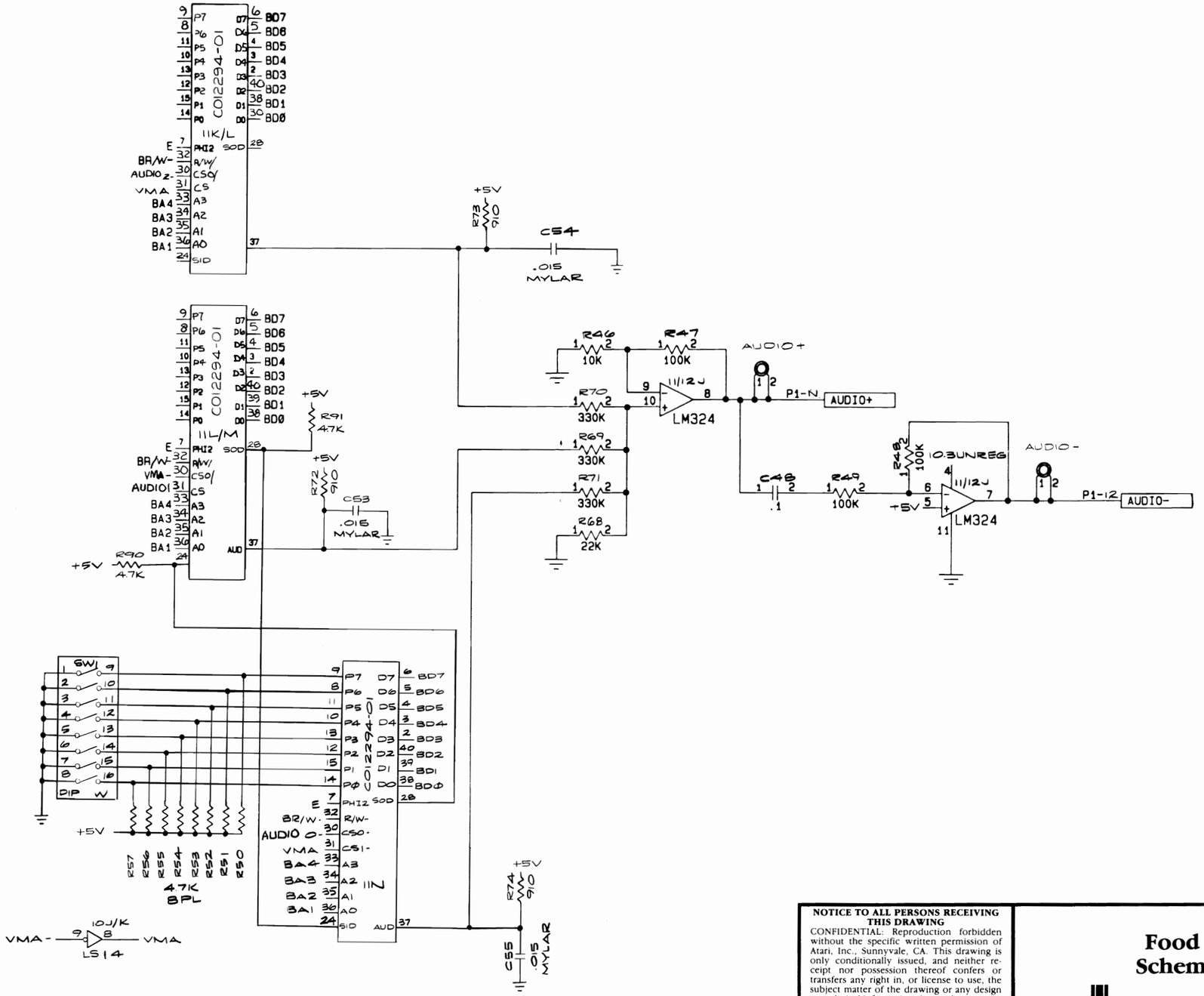

NOTICE TO ALL PERSONS RECEIVING THIS DRAWING

CONFIDENTIAL: Reproduction forbidden without the specific written permission of Atari, Inc., Sunnyvale, CA. This drawing is only conditionally issued, and neither receipt nor possession thereof confers or transfers any right in, or license to use, the subject matter of the drawing or any design or technical information shown thereon, nor any right to reproduce this drawing or any part thereof. Except for manufacture by vendors of Atari, Inc., and for manufacture under the corporation's written license, no right is granted to reproduce this drawing or the subject matter thereof, unless by written agreement with or written permission from the corporation.

Food Fight Sound Schematic Diagram

ATARI®

A Warner Communications Company

© ATARI INC. 1983

SP-229 Sheet 10A
1st Printing

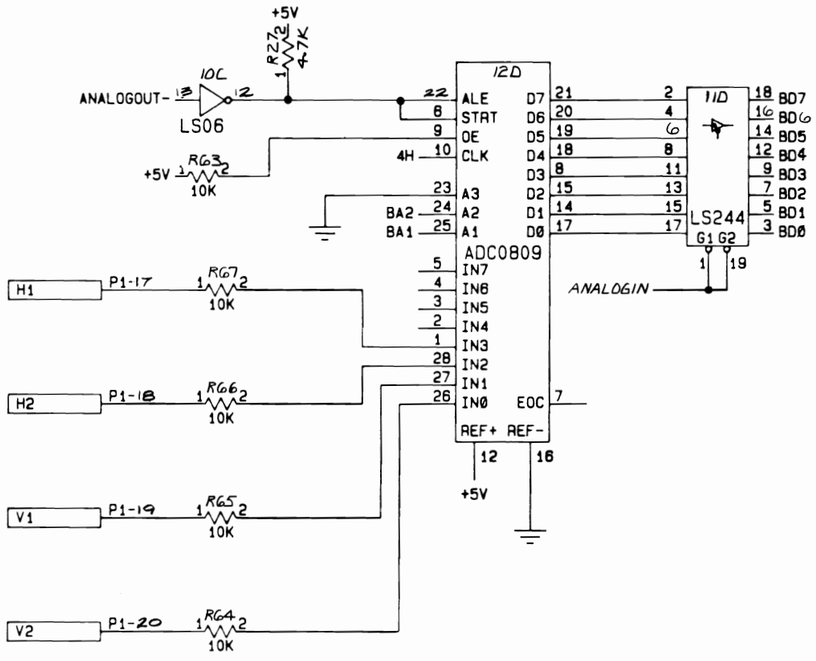

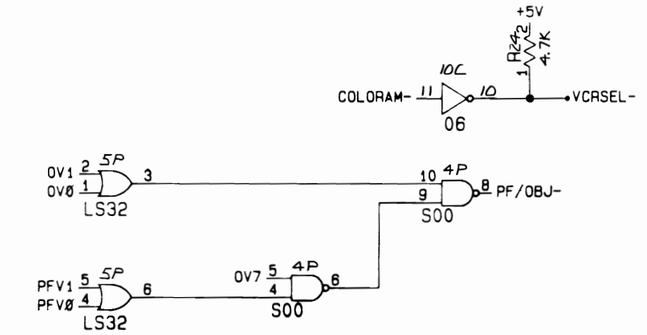

NOTICE TO ALL PERSONS RECEIVING THIS DRAWING

CONFIDENTIAL: Reproduction forbidden without the specific written permission of Atari, Inc., Sunnyvale, CA. This drawing is only conditionally issued, and neither receipt nor possession thereof confers or transfers any right in, or license to use, the subject matter of the drawing or any design or technical information shown thereon, nor any right to reproduce this drawing or any part thereof. Except for manufacture by vendors of Atari, Inc., and for manufacture under the corporation's written license, no right is granted to reproduce this drawing or the subject matter thereof, unless by written agreement with or written permission from the corporation.

Food Fight Analog Inputs Schematic Diagram

ATARI®

A Warner Communications Company

© ATARI INC. 1983

SP-229 Sheet 10B
1st Printing

Schematic Notes

Unless otherwise specified
- Resistance: (Ω) (K→KΩ, M→MΩ), 1/4 (W) carbon resistor
- Capacitance: 1 or higher→ (pF), less than 1→ (μF)
  - working voltage→ 50 (V)
  - ceramic capacitor
- Inductance: (μH)

Electrolytic Cap: Capacitance Value (μF)/working voltage (V), NP → non-polar (or bipolar) electrolytic cap.

Refer to the parts list for additional component information.

⏚ indicates test point connection

⏚ indicates chassis ground unless otherwise specified

Hz indicates cycles per second

For **safety** purposes (and continuing reliability)

⚠ replace all components marked with safety symbol with identical type.

NOTE: FR→ fusible resistor

Parts identification on circuit boards:
e.g. SU1126A (R107 = R1107)
SU3030A (R113 = R3113)

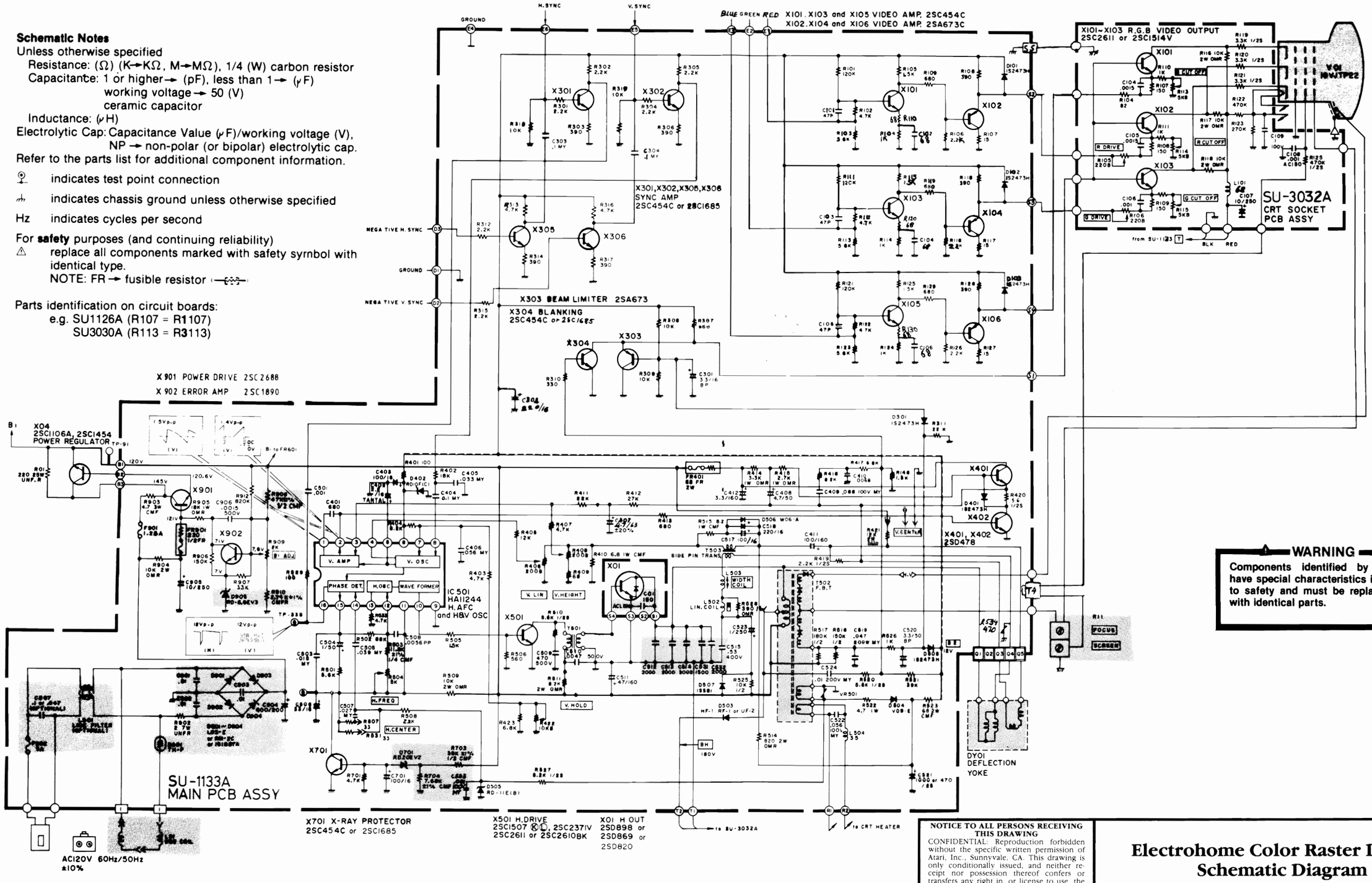

⚠ WARNING ⚠

Components identified by shading have special characteristics important to safety and must be replaced only with identical parts.

NOTICE TO ALL PERSONS RECEIVING THIS DRAWING

CONFIDENTIAL: Reproduction forbidden without the specific written permission of Atari, Inc., Sunnyvale, CA. This drawing is only conditionally issued, and neither receipt nor possession thereof confers or transfers any right in, or license to use, the subject matter of the drawing or any design or technical information shown thereon, nor any right to reproduce this drawing or any part thereof. Except for manufacture by vendors of Atari, Inc., and for manufacture under the corporation's written license, no right is granted to reproduce this drawing or the subject matter thereof, unless by written agreement with or written permission from the corporation.

Electrohome Color Raster Display Schematic Diagram

ATARI®

A Warner Communications Company

© ATARI INC. 1983

SP-229 Sheet 11A
1st Printing

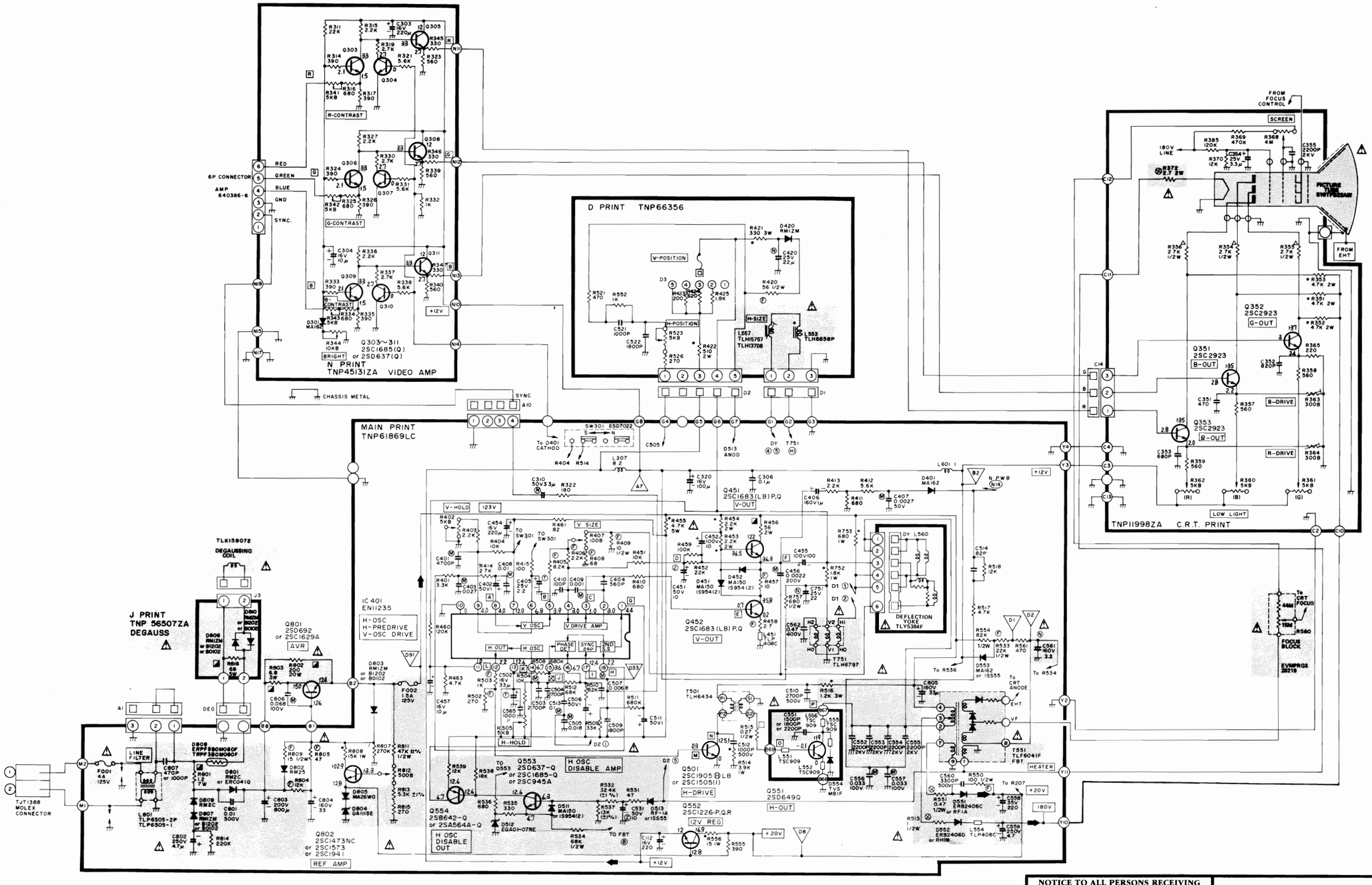

Waveform

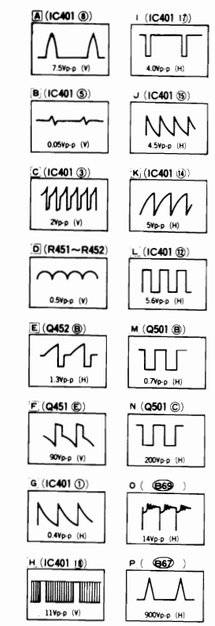

NOTE

1. RESISTOR
All resistors are carbon 1/4W resistor, unless otherwise noted the following marks
Unit of resistance is OHM (Ω). (K = 1,000, M = 1,000,000)
△ Solid
□ Wire Wound
F Non-Flamble
Cement
• Metal Oxide
Thermistor
Fuse

2. CAPACITOR
All capacitors are ceramic 50V capacitor, unless otherwise noted the following marks.
Unit of capacitance is μF, unless otherwise noted.
Electrolytic
Bipolar
Z type
Dipped Tantalum
V Safety Vent
C Titanium Oxide
Temp Compensation
M Polyester
Polystyrene
Polypro pylene

3. COIL
Unit of inductance is μH.

4. TEST POINT
Test point position

WARNING

Components identified by shading have special characteristics important to safety and must be replaced only with identical parts.

NOTICE TO ALL PERSONS RECEIVING THIS DRAWING

CONFIDENTIAL: Reproduction forbidden without the specific written permission of Atari, Inc., Sunnyvale, CA. This drawing is only conditionally issued, and neither receipt nor possession thereof confers or transfers any right in, or license to use, the subject matter of the drawing or any design or technical information shown thereon, nor any right to reproduce this drawing or any part thereof. Except for manufacture by vendors of Atari, Inc., and for manufacture under the corporation's written license, no right is granted to reproduce this drawing or the subject matter thereof, unless by written agreement with or written permission from the corporation.

Matsushita Color Raster Display Schematic Diagram

ATARI®

A Warner Communications Company

© ATARI INC. 1983

SP-229 Sheet 11B
1st Printing